Numatic International Spare Parts

Model No: TGB6055 EXPLODED VIEW : TOP TANK

Internal Code: -

DRAWING: DRW-21584 ISS:A12

NB: FOR WIRING SEE DRAWING:
DRW-21948 230V CHARGER
DRW-21949 CHARGERLESS

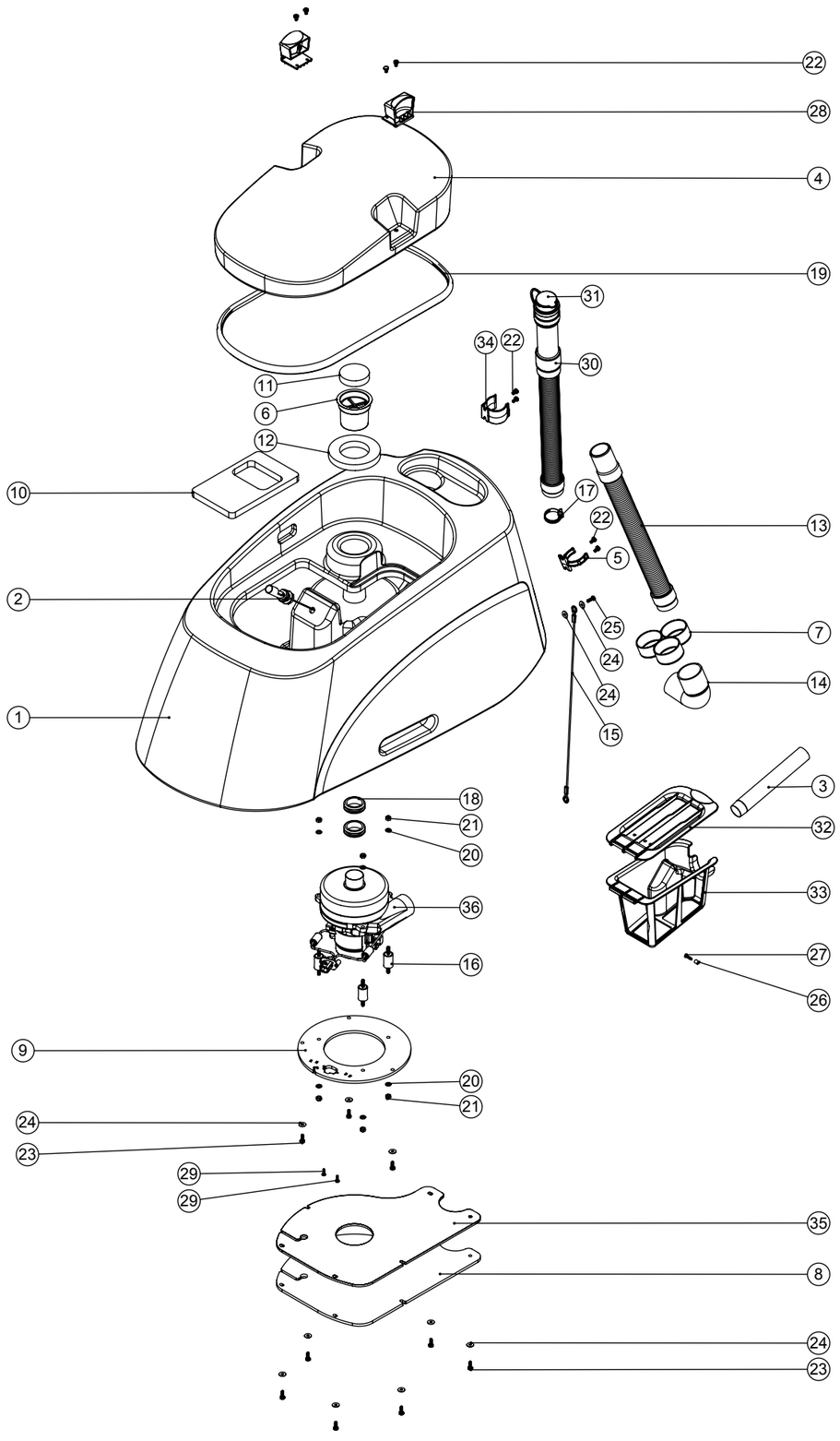

Numatic International Spare Parts

Model No: TGB6055 EXPLODED VIEW : TOP TANK

ITEM:	PART No:	Description	Comments	QTY
1	902295	TTV4555/TTB6055 GREY TOP TANK MOULDING C/W FLOAT SWITCH & TUBE		1
2	902234	FLOAT SWITCH (N.C.)	903038 SPARE END TIP	1
3	304386	PROCESSED ALUMINIUM WELDED TUBE CUT TO LENGTH (210MM)C6		1
4	902323	TTV4555 GREY SEPERATOR HOOD MOULDING		1
5	237754	35-38MM HOSE CLIP		1
6	237688	FOAM FILTER BODY		1
7	237718	HOSE GUIDE		1
8	902237	VAC MOTOR BOTTOM PLATE (2 STAGE)		1
9	902236	TANGENTIAL VAC MOTOR BRACKET (PP)		1
10	208950	FLOAT PAD		1
11	208947	INNER FOAM FILTER/OUTER FOAM FILTER		1
12	208947	INNER FOAM FILTER/OUTER FOAM FILTER		1
13	280021	35MM X 960MM LONG 3:1 STRETCH HOSE (SHORT & LONG CUFF)		1
14	216168	RIGHT ANGLED END CUFF		1
15	208204	495MM LONG LIFTING LINK WIRE		1
16	208334	30MM x 20MM ANTI VIBRATION MOUNT		3
17	206209	A.B.A HOSE CLIP		1
18	208144	38MM GROMMET X 6MM PANEL THICKNESS		2
19	391433	TTV4555 SEPARATOR SEALING GASKET CUT TO LENGTH		1
20	219870	M6 FORM A WASHER STAINLESS STEEL		6
21	219642	M6 STAINLESS STEEL NYLON INSERT NUT		6
22	291135	M5 X 10MM LONG STAINLESS STEEL POZI PAN SEMS SCREW		8
23	291132	M5 X 16MM LONG STAINLESS STEEL POZI PAN SEMS SCREW		9
24	219644	M5 FORM G STAINLESS STEEL WASHER		11
25	219547	M5 X 16MM LONG POZI PAN STAINLESS STEEL SCREW		1
26	219508	SPIROL SPACER		1
27	299021	No8 X 3/4 INCH LONG SELF TAP POZI PAN SCREW		1
28	902919	CLIP MOULDING (RED)		2
29	219569	NO8.1/2 INCH. LG.POZI-PAN.SCREW.STAINLESS STEEL.PLASTITE		2
30	901548	35MM X 250MM STRETCH HOSE (3:1) C/W ADJUSTABLE CUFF + CAP		1
31	900903	HOSE CLOSURE REPLACEMENT KIT (35MM-38MM STRETCH HOSE)	SPARE PART	1
32	903285	FILTER BASKET LID (RED)		1
33	903283	FILTER BASKET (RED)		1
34	237382	ACETAL HOSE CLIP MOULDING		1
35	903628	VAC MOTOR BOTTOM PLATE LINER		1
36	903716	24V TANGENTIAL DISCHARGE 2-STAGE VAC MOTOR & PLUG ASSEMBLY		1

Numatic International Spare Parts

Model No: TGB6055 EXPLODED VIEW : HANDLE

Internal Code:	-
	DRAWING: DRW-21589 ISS:A12
	24/10/2016

NB: FOR WIRING SEE DRAWING:
230V : DRW-21948
120v : DRW-23101

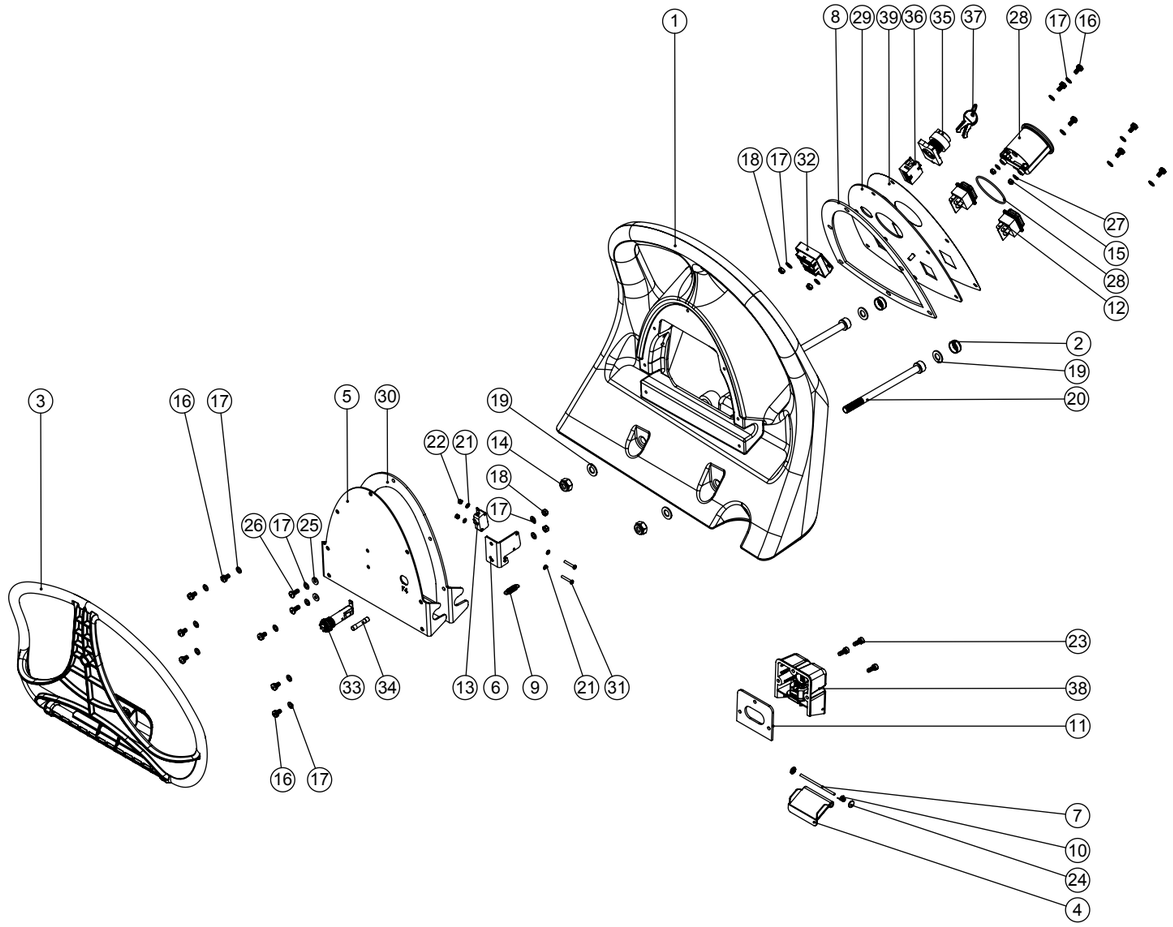

ITEM:	PART No:	Description	Comments	QTY
1	237113	HANDLE MOULDING		1
2	237632	SHOULDER BOLT COVER		2
3	902325	RED HANDLE TRIGGER MOULDING		1
4	227781	FLAP MOULDING		1
5	902263	HANDLE BACK PLATE ETB6055 PAINTED SILVER		1
6	902251	HANDLE MICRO SWITCH BRACKET PAINTED SILVER		1
7	390979	72MM LONG X 3MM DIAMETER STAINLESS STEEL BAR		1
8	208336	CONTROL PANEL PUNCHED GASKET		1
9	208356	TRIGGER SPRING		1
10	219819	TORSION SPRING		1
11	202105	SOCKET COVER SEALING GASKET		1
12	902235	SWITCH DPST RED ILLUMINATED WITH MEMBRANE 24V		2
13	208391	SNAP ACTION SWITCH		1
14	219897	M10 STAINLESS STEEL NYLON INSERT NUT		2
15	219687	M4 STAINLESS STEEL NYLON INSERT NUT		2
16	291135	M5 X 10MM LONG STAINLESS STEEL POZI PAN SEMS SCREW		13
17	219355	M5 FORM A STAINLESS STEEL WASHER		19
18	219633	M5 STAINLESS STEEL NYLON INSERT NUT		4
19	219903	M10 FORM A STAINLESS STEEL WASHER		4
20	902351	M10 X 150MM LONG SOCKET CAP SCREW STAINLESS STEEL		2
21	219501	M3 FORM A STAINLESS STEEL WASHER		4
22	291154	M3 NYLON INSERT NUT STAINLESS STEEL		2
23	291007	M5 X 12MM LONG STAINLESS STEEL SOCKET CAP SCREW		3
24	219832	3MM DIAMETER STARLOCK		2
25	219462	RUBBER WASHER		2
26	219740	M5 X 12MM LONG STAINLESS STEEL POZI PAN SCREW		2
27	219688	M4 FORM A STAINLESS STEEL WASHER		2
28	902532	BATTERY DISCHARGE INDICATOR + HOUR METER 24V	O-RING INCLUDED	1
29	903053	TGB6055 CONTROL PANEL ASSEMBLY PAINTED SILVER		1
30	903062	HANDLE BACK PLATE GASKET		1
31	291155	M3 X 20MM LONG POZI PAN SCREW STAINLESS STEEL		2
32	903031	TERMINAL BLOCK ASSEMBLY		1
33	903032	BULGIN PANEL MOUNT FUSEHOLDER		1
34	903066	FUSE 2.5A (6.3x32)		1
35	208138	KEY SWITCH (2 POSITION)		1
36	208137	KEY SWITCH ACTUATOR BLOCK		1
37	208167	SPARE SET OF KEYS (2 KEYS)	SPARE ITEM	1
38	904030	240V EMI FILTER WITH SOCKET COVER ASSEMBLY (PROCESSED)	240V VERSION	1
	904031	120V EMI FILTER WITH SOCKET COVER ASSEMBLY (PROCESSED)	120V VERSION	1
39	904765	TGB6055 (TGB1620) CONTROL PANEL OVERLAY		1

Numatic International Spare Parts

Model No: TGB6055 EXPLODED VIEW : BRUSH DECK

Internal Code:	N/A
PRO	DRAWING: DRW-21591 ISS:A14 06/07/2017

NB: FOR WIRING SEE DRAWING:

NON-TRACTION MODEL
230V : DRW-21948
120V : DRW-23101
CHARGERLESS : DRW-21949

TRACTION MODEL
230V : DRW-22424
120V : DRW-23894
CHARGERLESS : DRW-23895

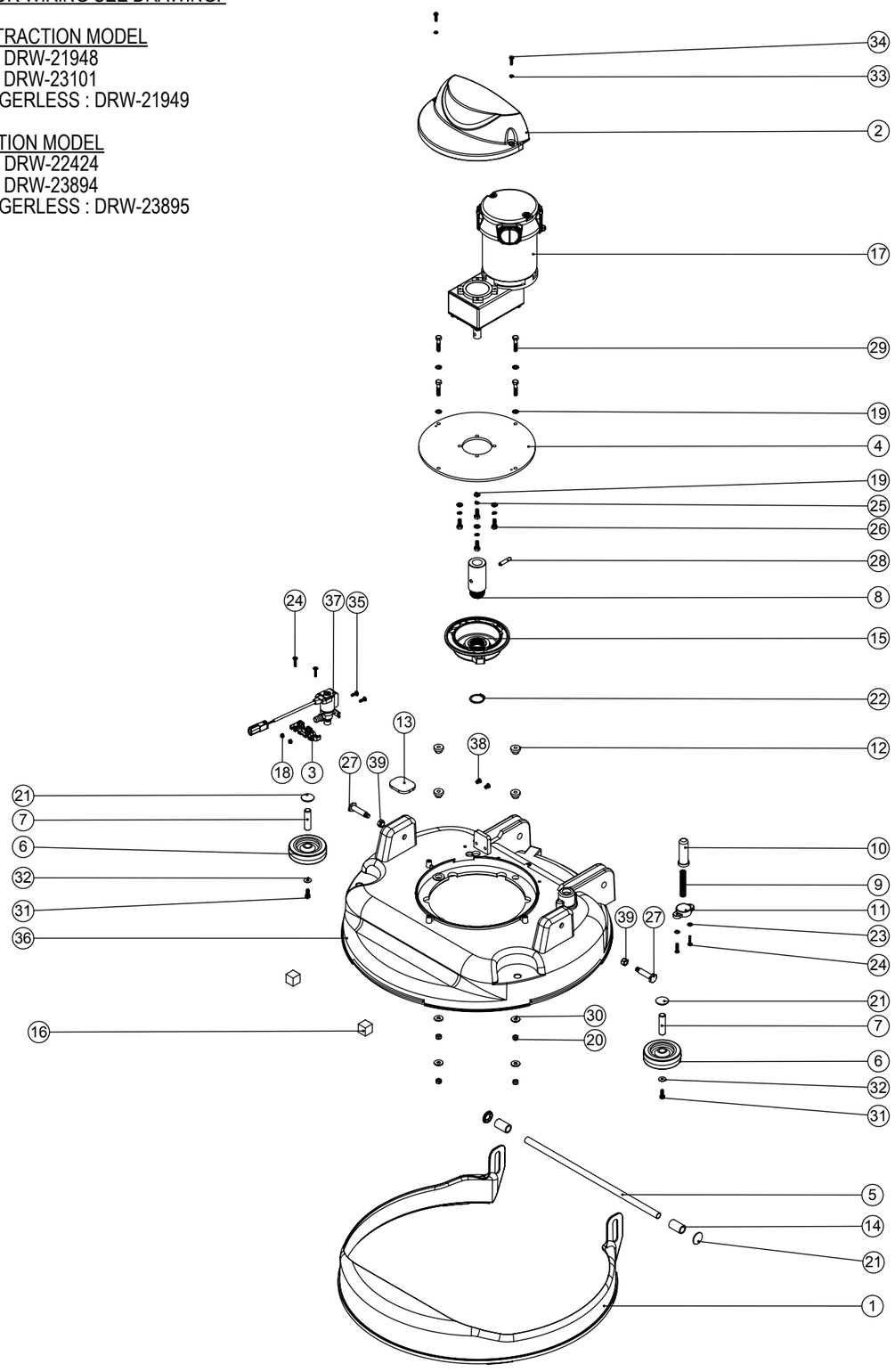

Numatic International Spare Parts

Model No: TGB6055 EXPLODED VIEW : BRUSH DECK

ITEM:	PART No:	Description	Comments	QTY
1	229562	SPLASH SKIRT MOULDING		1
2	237380	AMER MOTOR COVER		1
3	902556	SOLENOID MOUNT MOULDING		1
4	404166	TTB4045/4055 AMER MOTOR ADAPTOR PLATE PAINT SILVER GREY		1
5	391439	1/2 INCH DIAMETER X 18G STAINLESS STEEL TUBE (0.375)		1
6	204068	3 INCH GREY WHEEL		2
7	206013	BUFFER WHEEL PIN		2
8	208727	DRIVE SHAFT		1
9	219692	COMPRESSION SPRING		1
10	229128	PLUNGER		1
11	223242	PLUNGER MOUNTING PLATE MOULDING		1
12	229285	MOTOR MOUNTING SPACER		4
13	202098	FOOT PEDAL PAD		1
14	208769	NATUARL NYLON SPACER (12.8x18x30)		2
15	230285	MODIFIED CHUCK (CRO)		1
16	902352	FOAM SPACER 20MM		2
17	205245	AMER 100RPM MOTOR	230222 CARBON BRUSHES (SET)	1
18	219687	M4 STAINLESS STEEL NYLON INSERT NUT		2
19	219870	M6 FORM A WASHER STAINLESS STEEL		8
20	219642	M6 STAINLESS STEEL NYLON INSERT NUT		4
21	204021	12.7MM STAINLESS STEEL HUB CAP		4
22	230048	26MM EXTERNAL CIRCLIP		1
23	219355	M5 FORM A STAINLESS STEEL WASHER		2
24	219568	NO8.3/4 INCH LG.POZI-PAN.SCREW.STAINLESS STEEL.PLASTITE		4
25	219718	WASHER.M6.SPRING.STAINLESS STEEL		4
26	219719	M6 X 16MM LONG HEXAGONAL STAINLESS STEEL HEAD BOLT		4
27	206236	PIVOT PIN		2
28	291079	6MM X 30MM STAINLESS STEEL ROLL PIN		1
29	291022	M6 X 30MM LONG STAINLESS STEEL HEXAGONAL HEAD BOLT		4
30	219647	M6 FORM G STAINLESS STEEL WASHER		4
31	291132	M5 X 16MM LONG STAINLESS STEEL POZI PAN SEMS SCREW		2
32	219644	M5 FORM G STAINLESS STEEL WASHER		2
33	291145	M4 SHAKEPROOF WASHER STAINLESS STEEL		2
34	219862	M4 X 16MM LONG POZI PAN STAINLESS STEEL SCREW		2
35	219890	M4 X 12MM LONG POZI PAN STAINLESS STEEL SCREW		2
36	304445	6055 BASE MOULDING		1
37	902949	TERMINATED SOLONOID CABLE.BLACK.125.0M5.2.24		1
38	219009	M4 BRASS TAPPEX INSERT		2
39	219639	M8 STAINLESS STEEL NYLON INSERT NUT		2

Numatic International Spare Parts

Model No: TGB6055 EXPLODED VIEW : BOTTOM TANK

Internal Code: -

DRAWING: DRW-21592 ISS:A14

NB: FOR WIRING SEE DRAWING: DRW-21948

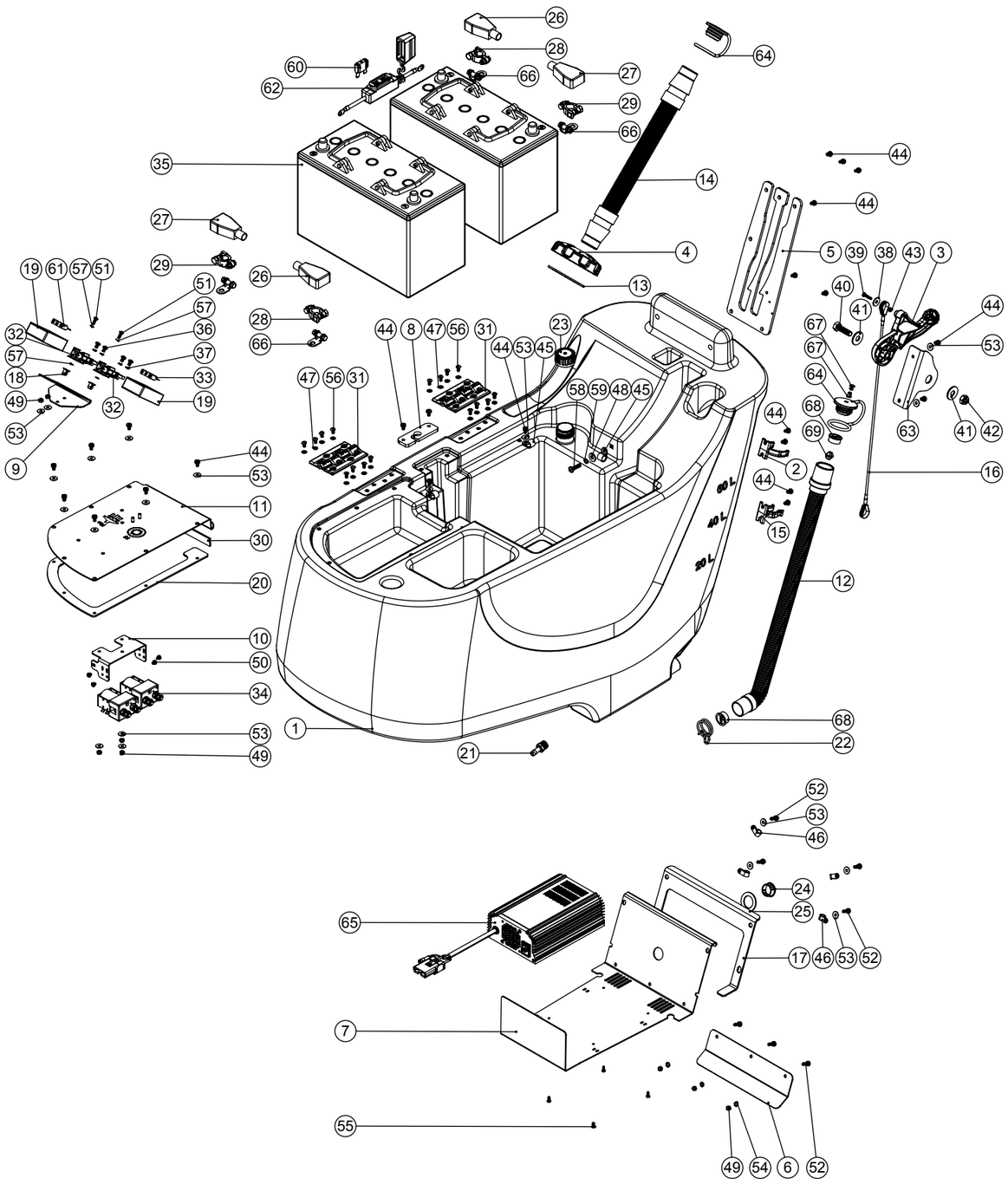

Numatic International Spare Parts

Model No: TGB6055 EXPLODED VIEW : BOTTOM TANK

ITEM:	PART No:	Description	Comments	QTY
1	902160	ETB6055 GREY BOTTOM TANK MOULDING (EP)	WITHOUT LOGO	1
	902159	ETB6055 GREY BOTTOM TANK MOULDING	WITH LOGO	1
2	237754	35-38MM HOSE CLIP		1
3	902324	RED SQUEEGEE LIFT HANDLE		1
4	237174	FILLER CAP WITH FILLER HOSE HOLE		1
5	404142	TTV4555 FOOT PEDAL GUIDE PLATE - Z/PL		1
6	902257	CHARGER SPLASH SKIRT PAINTED SILVER		1
7	902258	ETB6055 NORD CHARGER PLATE PAINTED SILVER		1
8	902238	RETAINING PLATE		1
9	902254	FUSE BRACKET PAINTED SILVER		1
10	902253	CONTACTOR BRACKET PAINTED SILVER		1
11	902269	ELECTRONICS PLATE ASSY PAINTED SILVER		1
12	213025	DUMP HOSE		1
13	208564	FILLER CAP SEALING RING		1
14	206842	420MM LONG BLACK STRETCH HOSE C/W CUFFS		1
15	901916	28mm HOSE CLIP		1
16	208996	LIFTING WIRE TTV4555 / TTB6055		1
17	208337	CHARGER PLATE PUNCHED GASKET		1
18	900986	NYLON GROMMET NUT (PLASTIC INSERT TO SUIT No 8 PLASTITE SCREW)		2
19	208802	MAXI-FUSE HOLDER COVER		2
20	902066	PUMP PLATE GASKET (4555/6055)		1
21	219389	3/8 BSPP MALE C/W UNDERCUT & O RING TO 10.5MM HOSETAIL		1
22	902133	SPRING WIRE CLAMP (YDNAC-Y8010356)		1
23	208106	BOTTLE CAP		1
24	206314	WINDOW PLUG		1
25	902328	WINDOW PLUG GASKET		1
26	208936	BLACK BATTERY TERMINAL COVER (415N8V14)		2
27	208935	RED BATTERY TERMINAL COVER (415N8V02)		2
28	220455	BATTERY TERMINAL CONVERTOR	80Ah VERSION	2
29	220454	POSITIVE BATTERY TERMINAL CONVERTER	80Ah VERSION	2
30	902387	3MM X 19MM INSEAL TYPE 3259 (190MM)		1
31	303954	PLASTIC HINGE ASSEMBLY		2
32	230102	FUSE HOLDER RATED AT 60 AMPS		2
33	230104	30 AMP MAXI FUSE		1
34	230111	CONTACTOR		2
35	220867	12V TRACTION BLOCK BATTERY	80Ah VERSION	2
	205112	100 AMP/HOUR REPLACEMENT BATTERY (C/W PACKAGING FOR 230138 BATTERY)	100Ah VERSION	2
36	219864	M5 X 8MM LONG POZI-PAN SCREW Z/PL		4
37	219861	M5 SINGLE COIL STAINLESS STEEL WASHER		4
38	291118	M5 STAINLESS STEEL WASHER 19MM OD		1
39	219686	M4 X 20MM LONG STAINLESS STEEL POZI PAN MACHINE SCREW		1
40	219895	M10 X 35MM LONG HEXAGONAL STAINLESS STEEL SCREW		1
41	291124	M10 PENNY WASHER STAINLESS STEEL		2
42	219897	M10 STAINLESS STEEL NYLON INSERT NUT		1
43	219687	M4 STAINLESS STEEL NYLON INSERT NUT		1
44	291135	M5 X 10MM LONG STAINLESS STEEL POZI PAN SEMS SCREW		23
45	219465	P-CLIP		3
46	219393	P CLIP		4
47	219355	M5 FORM A STAINLESS STEEL WASHER		16
48	219647	M6 FORM G STAINLESS STEEL WASHER		1
49	219633	M5 STAINLESS STEEL NYLON INSERT NUT		8
50	219566	M4 X 6MM LONG POZI PAN SCREW		4
51	219569	NO8.1/2 INCH. LG.POZI-PAN.SCREW.STAINLESS STEEL.PLASTITE		2
52	291132	M5 X 16MM LONG STAINLESS STEEL POZI PAN SEMS SCREW		7
53	219644	M5 FORM G STAINLESS STEEL WASHER		20
54	291020	M5 STAINLESS STEEL EXTERNAL SHAKEPROOF LOCK WASHER		3
55	902533	No6 X 3/8 INCH LONG POZI PAN SELF TAP SCREW STAINLESS STEEL		4
56	291004	M5 X 10MM LONG STAINLESS STEEL BUTTON HEAD SCREW		16
57	291145	M4 SHAKEPROOF WASHER STAINLESS STEEL		4
58	902232	M6 X 25MM LONG POZI PAN SCREW STAINLESS STEEL		1
59	902353	M6 EXTERNAL SHAKEPROOF WASHER STAINLESS STEEL		1
60	221047	40 AMP MAXI FUSE		1
61	221091	20 AMP MAXI FUSE		1
62	903175	WATERPROOF BATTERY FUSE HOLDER.210.RING.RING		1
63	903270	FLOOR TOOL HANDLE BRACKET Z/PL		1
64	903341	32MM HOSE CAP RED (C/W 8MM HOLE)		2
65	902988	230V/24V/10 AMP HF NORD CHARGER (PROCESSED 185MM LONG WIRING)	230V	1
	903735	120V/24V/10 AMP HF NORD CHARGER (PROCESSED 185MM LONG WIRING)	120V	1
66	902666	BATTERY CONNECTOR (M6 - M10)	100Ah VERSION	4
67	904403	BARBED RIVET BLACK		2
68	904108	FLOAT STOP MOULDING		2
69	904109	FLOAT MOULDING		1

Numatic International Spare Parts

Model No: TGB6055 EXPLODED VIEW : CHASSIS

Internal Code: -

DRAWING: DRW-21593 ISS:A12

30/01/2018

NB: FOR WIRING SEE DRAWING: N/A

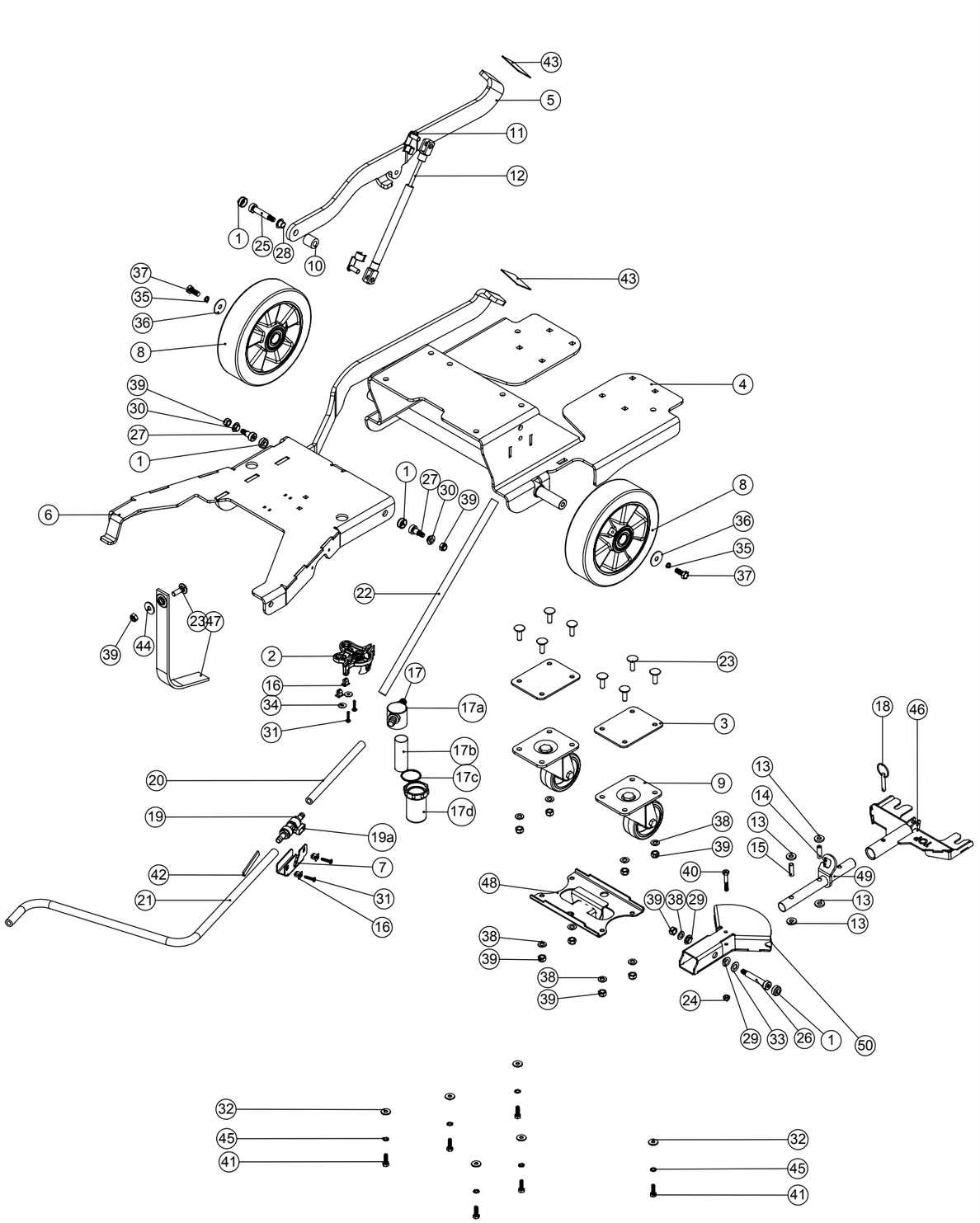

Numatic International Spare Parts

Model No: TGB6055 EXPLODED VIEW : CHASSIS

ITEM:	PART No:	Description	Comments	QTY
1	237632	SHOULDER BOLT COVER		4
2	901006	FILTER MOUNTING BRACKET		1
3	329581	CASTOR ADAPTOR SPACER		2
4	902266	ETB6055 CHASSIS WELD ASSEMBLY PAINTED SILVER		1
5	404131	TTV4555 EXTRA LOAD PEDAL Z/PL		1
6	902268	ETB6055 DECK LIFTING LINK Z/PL		1
7	902262	TAP BRACKET PAINTED SILVER		1
8	204120	WICKE 200 X 50MM ALU WHEEL		2
9	204116	HEAVY DUTY CASTOR. BLUE TYRE		2
10	208350	NYLON SPACER I/D 10.2MM X O/D 20.0MM X LENGTH 21.0MM		1
11	208634	GAS RAM CLEVIS CLIP		2
12	208623	280N GAS RAM		1
13	206964	SLIDE NYLON SPACER		4
14	206963	VERTICAL NYLON SPACER		1
15	206954	SPIRO SPACER		1
16	900986	NYLON GROMMET NUT (PLASTIC INSERT TO SUIT No 8 PLASTITE SCREW)		4
17	208888	EXTENDED STRAINER		1
17a	208827	STRAINER BLACK TOP	SPARE PART	1
17b	208889	EXTENDED STRAINER 50 MESH SCREEN	SPARE PART	1
17c	208830	STRAINER GASKET	SPARE PART	1
17d	208890	EXTENDED STRAINER CLEAR BOWL	SPARE PART	1
18	206953	DETENT PINS		1
19	208761	10MM HOSE TAIL TO 10MM HOSE TAIL BALL VALVE ASSEMBLY		1
19a	901544	TAP HANDLE C/W COVER AND M3X6MM SCREW (SPARE ITEM)	SPARE PART	1
20	303713	SILICONE TUBE (210MM LONG)		1
21	391216	SILICON TUBE 8MM I/D X 3.2MM WALL SECTION (CUT 600MM)		1
22	304443	SILICON TUBE 8MM I/D X 3.2MM WALL SECTION (CUT 420MM)		1
23	902010	M8 X 25 COACH BOLT S/S		9
24	219642	M6 STAINLESS STEEL NYLON INSERT NUT		1
25	208355	M8 X 10 X 40MM LONG HEX SOCKET SHOULDER BOLT		1
26	208333	M8 X 10 X 50MM LONG HEX SOCKET SHOULDER BOLT		1
27	208313	M8 X 10 X 12MM LONG HEX SOCKET SHOULDER BOLT		2
28	208331	IGUS BEARING (GFM 101209)		1
29	208312	IGUS BEARING (GFM 101205)		2
30	208330	IGUS BEARING (GFM 101206)		2
31	219568	NO8.3/4 INCH LG.POZI-PAN.SCREW.STAINLESS STEEL.PLASTITE		4
32	219647	M6 FORM G STAINLESS STEEL WASHER		6
33	219903	M10 FORM A STAINLESS STEEL WASHER		1
34	219644	M5 FORM G STAINLESS STEEL WASHER		2
35	219898	M8 SINGLE COIL STAINLESS STEEL WASHER		2
36	219877	M8 X 30 STAINLESS STEEL WASHER		2
37	219717	M8 X 20MM LONG HEXAGONAL STAINLESS STEEL BOLT		2
38	219578	M8 FORM A STAINLESS STEEL WASHER		9
39	219639	M8 STAINLESS STEEL NYLON INSERT NUT		12
40	291125	M6 X 40 LONG HEX BOLT STAINLESS STEEL		1
41	219976	M6 X 20MM LONG HEXANGONAL HEAD SET SCREW		6
42	902760	3MM THICK X 9MM WIDE INSEAL (212052 x 60MM LONG)		1
43	903064	FOOT PEDAL PAD (RED)	903063 CUT TO LENGHT	2
44	219716	M8 FORM G STAINLESS STEEL WASHER		1
45	902353	M6 EXTERNAL SHAKEPROOF WASHER STAINLESS STEEL		6
46	304466	FLOOR TOOL BRACKET ASSEMBLY (TT/TTB4045/4055)		1
47	903323	ANTI-STATIC STRAP (CUT TO LENGHT: 320MM LONG)		1
48	904960	FLOOR TOOL LIFTING PIVOT BRACKET WELD ASSY PAINTED SILVER		1
49	905730	TGB6055 FLOOR TOOL PIVOT TUBE ASSEMBLY		1
50	905728	FLOOR TOOL LIFTING PLATE WELD ASSEMBLY (3MM M/S) Z/PL		1

Numatic International Spare Parts

Model No: 650 TWINTEC ALUMINIUM FLOOR TOOL (38MM HOSE, RED TRIM, SERILOR BLADES)

Internal Code:	903347
PRO	DRAWING: DRW-22621 ISS:A09 27/03/2018

NB: FOR WIRING SEE DRAWING: N/A

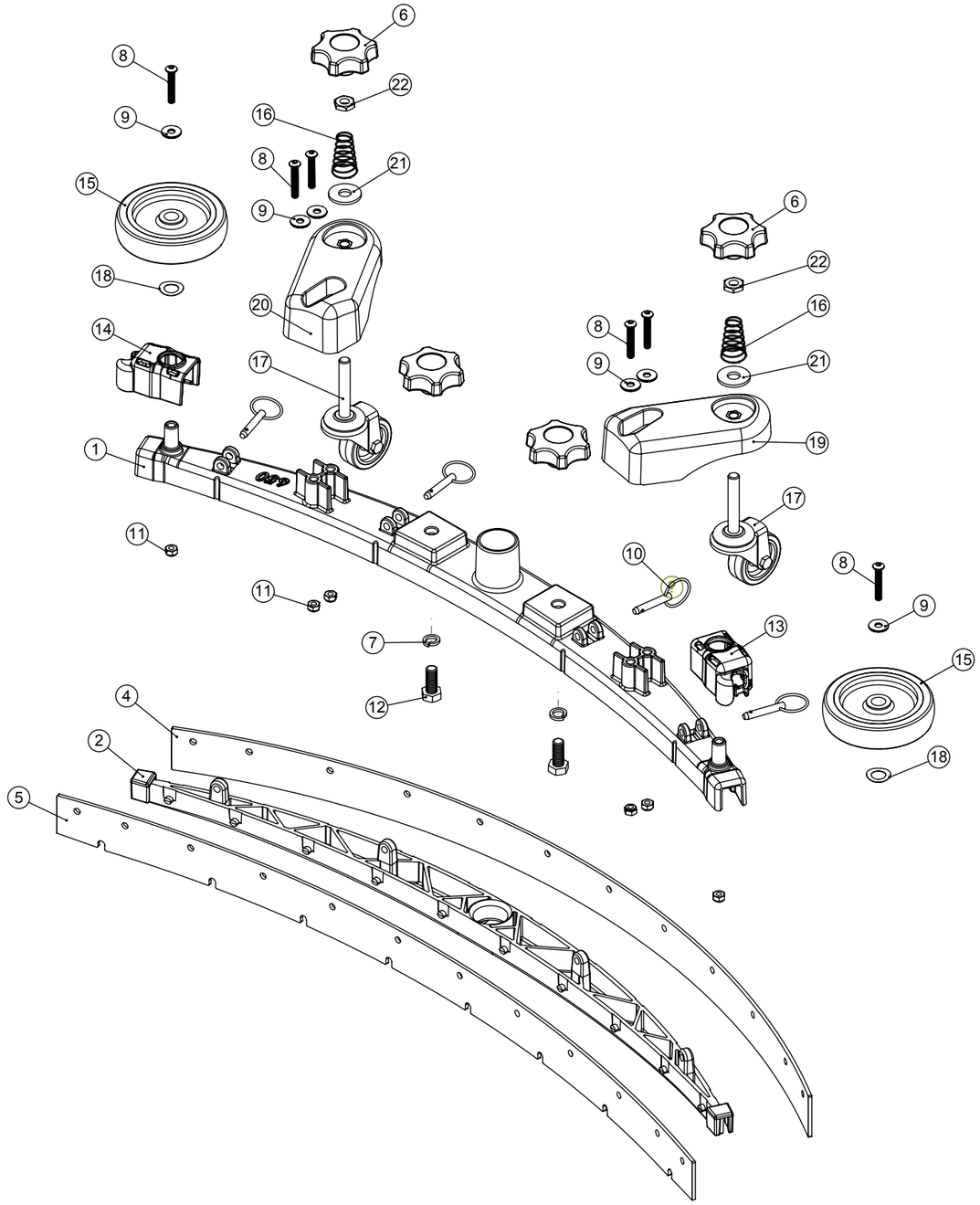

Numatic International Spare Parts

Model No: 650 TWINTEC ALUMINIUM FLOOR TOOL (38MM HOSE, RED TRIM, SERILOR BLADES)

ITEM:	PART No:	Description	Qty
1	208198	(650MM SCRUB WIDTH) ALUMINIUM SQUEEGEE CASTING (38MM HOSE FITTING)	1
2	903345	(650MM SCRUB WIDTH) RED BLADE HOLDER MOULDING (SLOPING PROFILE) (32MM & 38MM HOSE FITTING)	1
	900518	650 REPLACEMENT SERILOR GREEN POLYURETHANE BLADES SET	
4	208970	(650MM SCRUB WIDTH) REPLACEMENT (4.0MM / 35-45-35 SHORE A) REAR LAMINATED SERILOR POLY/BLADE (847MM LONG)	1
5	208967	(650MM SCRUB WIDTH) REPLACEMENT (3.2MM / 40 SHORE A) FRONT MONOLAYER SERILOR POLY/BLADE (819MM LONG	1
6	903281	M10 LOBE KNOB (RED)	4
7	219899	M10 SINGLE COIL STAINLESS STEEL WASHER	2
8	219933	M6 X 35MM SOCKET BUTTON HEAD BOLT STAINLESS STEEL	6
9	219647	M6 FORM G STAINLESS STEEL WASHER	6
10	206953	DETENT PINS	4
11	219642	M6 STAINLESS STEEL NYLON INSERT NUT	6
12	219909	M10 X 25MM LONG HEXAGONAL STAINLESS STEEL SCREW	2
13	237322	RIGHT HAND FLOOR TOOL CLIP MOULDING	1
14	237323	LEFT HAND FLOOR TOOL CLIP MOULDING	1
15	208796	4 INCH WHEEL	2
16	229175	CONICAL SPRING	2
17	907759	50MM DIAMETER GREY TPR TYRED SWIVEL CASTOR C/W M10 X 60 SWAGED STEM.	2
18	219891	13MM WAVEY WASHER	2
19	906860	ADJUSTABLE FLOOR TOOL CASTOR PLASTIC PLATE LEFT	1
20	906859	ADJUSTABLE FLOOR TOOL CASTOR PLASTIC PLATE RIGHT	1
21	291124	M10 PENNY WASHER STAINLESS STEEL	2
22	219951	A4 (STAINLESS STEEL) M10 HEX LOCK NUT (HALF NUT)	2