Numatic International Spare Parts

234860
DRAWING: DRW-11298 ISS: A05
13/04/2014

Model No: TTV5565/200T TTV4555/100T TTB6055/100T TTB6055/100 TTB1620 HANDLE ASSEMBLY

NB: FOR WIRING SEE DRAWING: DRW-10996 / DRW-11578 / DRW-12520 / DRW-12523 / DRW-15679 / DRW-15722 / DRW-15721

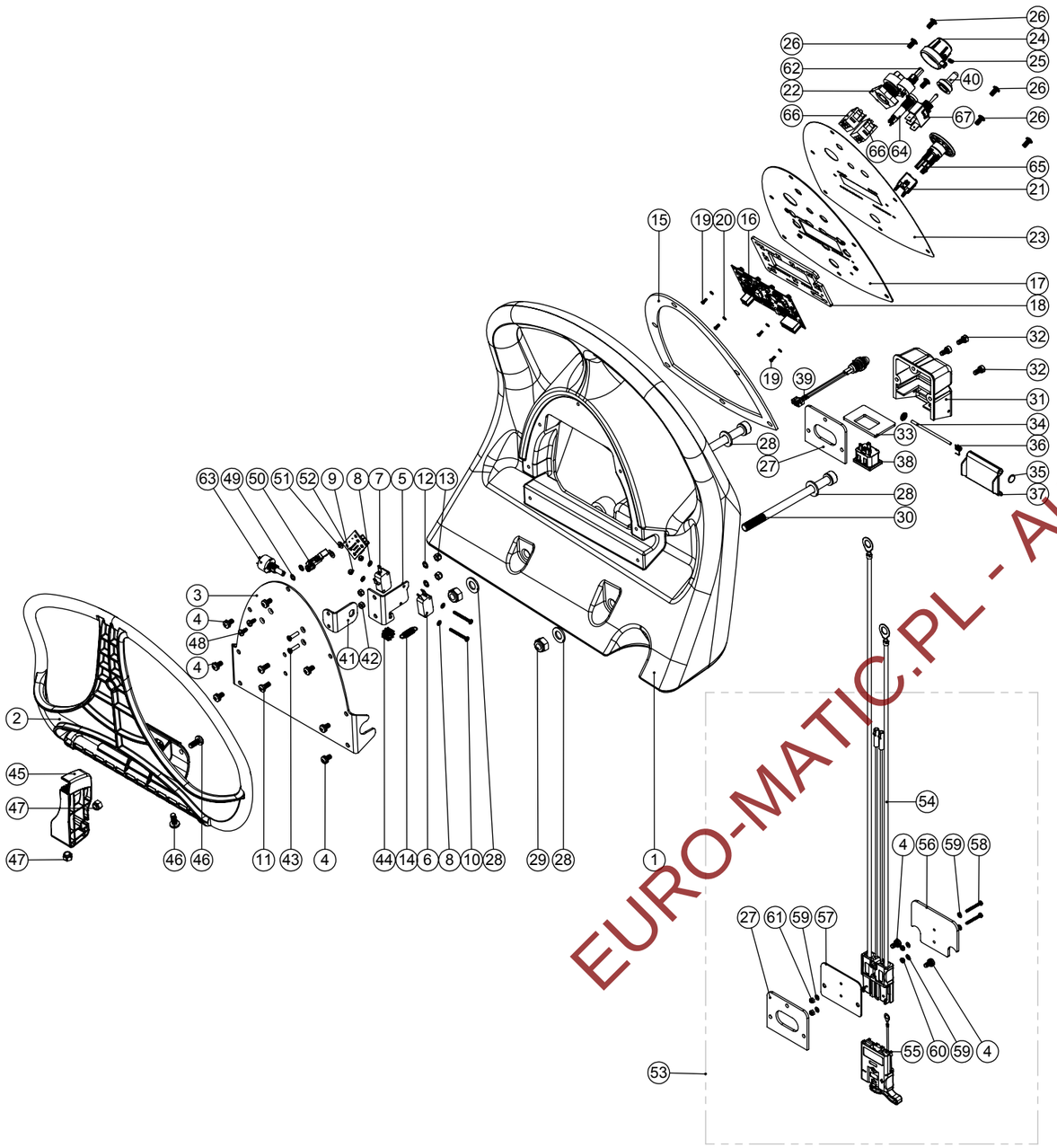

EURO-MATIC.PL - Autoryzowany sklep Numatic

Numatic International Spare Parts

Model No: TTV5565/200T TTV4555/100T TTB6055/100T TTB6055/100 TTB1620 HANDLE ASSEMBLY

ITEM:	PART No:	DESCRIPTION:	COMMENTS:
1	237113	HANDLE MOULDING	
2	304354	PROCESSED BLUE HANDLE TRIGGER MOULDING	
	237295	BLUE HANDLE TRIGGER MOULDING	TTB 6055/100 & TTB1620
	237717	PROCESSED GREY TRIGGER MOULDING	
	237717	GREY TRIGGER MOULDING	TTB6055/100 & TTB1620
3	404095	HANDLE BACK PLATE (PAINTED GREY)	
4	219047	M5 X 10MM LONG POZI PAN SEMS SCREW	
5	392055	HANDLE TRIGGER SWITCH PLATE	
6	229483	SNAP ACTION SWITCH	
7	208391	SNAP ACTION SWITCH	TRACTION MACHINES ONLY
8	219237	M3 FORM A WASHER	
9	219070	M3 NYLON INSERT NUT	
10	219611	M3 X 30MM LONG POZI PAN SCREW	
	219939	M3.20MM LG.SLOT.SCREW.STAINLESS STEEL	TTB 6055/100 & TTB1620
11	219049	M5 X 12MM LONG POZI PAN SCREW	
12	219016	M5 SHAKEPROOF WASHER	
13	219076	M5 NYLON INSERT NUT	
14	208356	TRIGGER SPRING	
15	208336	CONTROL PANEL PUNCHED GASKET	
16	208604	TTV5565 DISPLAY PCB REDUCED FLOW RATE (WHISPER MODE) HI/LO VERSION	TTV 5565/200T
	208716	TTV4555/100T DISPLAY PCB REDUCED FLOW RATE (WHISPER MODE) HI/LO VERSION	TTV 4555/100T
	208881	LCD DISPLAY PCB REDUCED FLOW RATE (WHISPER MODE) HI/LO VERSION	TTV4555/100T : NORD CHARGER
	208705	TTV LCD DISPLAY WITHOUT DETERGENT	TTB 6055/100T & TTB 6055/100
	208882	LCD DISPLAY WITHOUT DETERGENT	TTB1620 : NORD CHARGER
17	303947	CONTROL PANEL C/W SELF-CLINCH NUTS	
	304431	TTB6055 CONTROL PANEL C/W CLINCH NUTS	TTB 6055/100 & TTB1620
18	392044	DISPLAY PCB PLASTIC SPACER PLATE	
19	219978	M2 X 6MM LONG POZI PAN SCREW	
20	219977	M2 NYLON WASHER	
21	208458	SWITCH BLOCK (DOUBLE POLE / 2 POSITION) (A0152B)	TRACTION MACHINES ONLY
22	208438	KEY SWITCH (2 POSITION)	
23	208621	TTV5565/4555 HI/LO CONTROL PANEL OVERLAY	TTV 5565/200T(HI/LO) & TTV 4555/100T
	208326	TTV5565 CONTROL PANEL OVERLAY	TTV 5565/200T
	208713	TTB6055 TRACTION HANDLE DISPLAY OVERLAY	TTB 6055/100T
	208712	TTB6055 NON TRACTION HANDLE DISPLAY OVERLAY	TTB 6055/100 & TTB1620
24	329363	SPEED ADJUSTMENT KNOB C/W INSERT	TRACTION MACHINES ONLY
25	219744	M4 X 6MM LONG BLACKODISED GRUB SCREW	TRACTION MACHINES ONLY
26	291004	M5 X 10MM LONG STAINLESS STEEL BUTTON HEAD SCREW	
27	202105	SOCKET COVER SEALING GASKET	
28	219012	M10 FORM E WASHER	
29	219649	M10 NYLON INSERT NUT	
30	291001	M10 X 150MM LONG SOCKET CAP SCREW BLACKODISED	
31	329355	SOCKET COVER MOULDING C/W LARGE MOULDED HOLE (WITH PROCESSED HOLES)	ON-BOARD CHARGER, STANDARD MACHINE
	303629	SOCKET COVER MOULDING C/W LARGE MOULDED HOLE (WITH PROCESSED HOLES)	ON-BOARD CHARGER, FLAME RETARDENT CSA
32	291013	M5 X 10MM LONG SOCKET CAP SCREW	ON-BOARD CHARGER
33	329297	SOCKET MOUNTING PLATE	ON-BOARD CHARGER
34	390979	72MM LONG X 3MM DIAMETER STAINLESS STEEL BAR	ON-BOARD CHARGER
35	219832	3MM DIAMETER STARLOCK	ON-BOARD CHARGER
36	219819	TORSION SPRING	ON-BOARD CHARGER
37	227781	FLAP MOULDING	ON-BOARD CHARGER
38	220391	3 PIN APPLIANCE SOCKET	ON-BOARD CHARGER
39	270193	NEON INDICATOR RED LENS 230V C/W LINK WIRES	TRACTION MACHINES ONLY
	270195	NEON INDICATOR RED LENS 120V C/W LINK WIRES	TRACTION MACHINES ONLY
40	206785	SWITCH COVER C/W NUT	TRACTION MACHINES ONLY
41	392201	POTENTIOMETER BRACKET	TRACTION MACHINES ONLY
42	219083	M4 NYLON INSERT NUT	
43	219407	M4 X 16MM LONG POZI PAN COUNTERSUNK SCREW	
44	237383	POTENTIOMETER GEAR	TRACTION MACHINES ONLY
45	237384	TRIGGER RACK MOULDING	TRACTION MACHINES ONLY
46	219646	M6 X 16MM LONG POZI PAN STAINLESS STEEL SCREW	TRACTION MACHINES ONLY
47	219088	M6 NYLON INSERT NUT	TRACTION MACHINES ONLY
48	219840	NO.6 X 3/8 INCH LONG POZI PAN COUNTERSUNK S/TAP SCREW(STAINLESS STEEL)	TRACTION MACHINES ONLY
49	219015	M4 SHAKEPROOF WASHER	TRACTION MACHINES ONLY
50	220595	PCB QUICK RELEASE STAND OFF	TRACTION MACHINES ONLY
51	219206	M4 FORM A WASHER	TRACTION MACHINES ONLY
52	208822	INTERCONNECT PCB (SPEED CONTROL)	TRACTION MACHINES ONLY
53	323218	TTV5565 EXTERNAL CHARGER PLUG ASSEMBLY	CHARGERLESS; ITEMS 54-61
54	323216	LOOM ASSEMBLY - 4 CIRCUITS	CHARGERLESS
55	323217	LOOM ASSEMBLY - 1 CIRCUIT	CHARGERLESS
56	392408	CHARGER PLUG SPLASH GUARD	CHARGERLESS
57	392407	CHARGER PLUG PLATE	CHARGERLESS
58	219519	M3 X 25MM LONG POZI PAN SCREW	CHARGERLESS
59	219237	M3 FORM A WASHER	CHARGERLESS
60	219502	M3 STAINLESS STEEL FULL NUT	CHARGERLESS
61	219070	M3 NYLON INSERT NUT	CHARGERLESS
62	270316	POTENTIOMETER TYPE Pe30 22k OHMS 20% 3W (WITH PANEL SEAL) (ROUND SHAFT WITH FLAT / NO SLOT IN SHAFT END)	
63	270294	POTENTIOMETER TYPE Pe30 22k OHMS 20% 3W (WITH PANEL SEAL) (ROUND SHAFT C/W SLOT ON SHAFT END)	
64	270291	GREEN LED INDICATOR 2V C/W 2.2K RESISTOR	
65	208357	EMERGENCY STOP 40MM DIAMETER BUTTON	
66	208137	KEY SWITCH ACTUATOR BLOCK	
67	206786	SWITCH	

Części zamienne do Numatic TTB6055 – sprawdź w euro-matic.pl ›
Autoryzowany sklep euro-matic.pl · infolinia 505 605 601 · sklep@euro-matic.pl

Numatic International Spare Parts

234975
DRAWING: DRW-13950 ISS: A02
23/05/2014

Model No: TTV4555/ TTB6055/ TTB6055/ TTB1620 TOP TANK/ HOOD/ VAC MOTOR

NB: FOR WIRING SEE DRAWING: TTV4555 = DRW-11578 / TTB6055/100T = DRW-12520 / TTB6055/100 & TTB1620 = DRW-12523

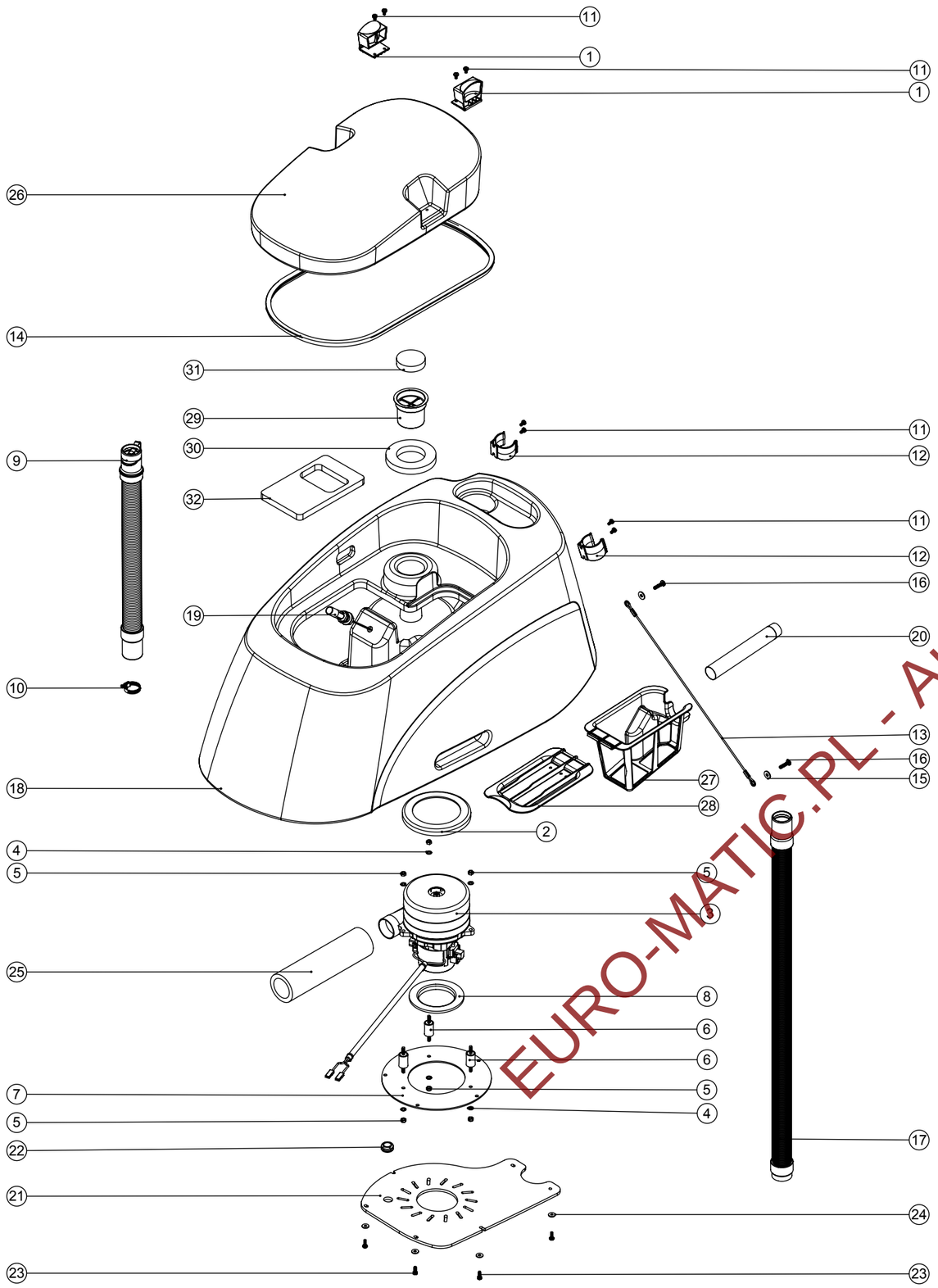

Numatic International Spare Parts

Model No: TTV4555/ TTB6055/ TTB6055/ TTB1620 TOP TANK/ HOOD/ VAC MOTOR

ITEM:	PART No:	DESCRIPTION	COMMENTS:
1	229494	CLIP MOULDING	
2	202031	BOTTOM MOTOR GASKET	
3	321905	TTB4555/100T VAC MOTOR / LOOM ASSEMBLY C/W 465MM LONG MOTOR WIRES	
4	219007	M6 FORM B WASHER	
5	219642	M6 STAINLESS STEEL NYLON INSERT NUT	
6	208334	30MM x 20MM ANTI VIBRATION MOUNT	
7	404072	TANGENTIAL VAC MOTOR BRACKET (PAINTED GREY)	
8	202008	MOTOR CAP GASKET	
9	213047	38MM X 470MM LONG 3:1 STRETCH HOSE C/W CAP & STRAP	
10	206209	A.B.A HOSE CLIP	
11	219047	M5 X 10MM LONG POZI PAN SEMS SCREW	
12	237382	ACETAL HOSE CLIP MOULDING	
13	208204	495MM LONG LIFTING LINK WIRE	
14	391433	TTV4555 SEPARATOR SEALING GASKET CUT TO LENGTH	
15	219008	M6 FORM G WASHER	
16	219056	M6 X 25MM LONG POZI PAN SCREW	
17	208335	850MM LONG FLOOR TOOL STRETCH HOSE	
18	237401	TTV4555 BLUE TOP TANK MOULDING C/W FLOAT SWITCH & TUBE	
19	206944	FLOAT SWITCH	
20	304386	PROCESSED ALUMINIUM WELDED TUBE CUT TO LENGTH (210MM)	
21	392204	TTV4555 VAC MOTOR BOTTOM PLATE	
22	208143	20MM GROMMET X 6MM PANEL THICKNESS	
23	219045	M5 X 16MM LONG POZI PAN SEMS SCREW	
24	219005	M5 FORM G WASHER	
25	208654	210mm LONG SILENCER FOAM TUBE	
26	237402	TTV4555 SEPARATOR HOOD	
27	208417	TTV55/65 FILTER BASKET	
28	237173	FILTER BASKET LID	
29	237688	FOAM FILTER BODY	
30	208947	INNER FOAM FILTER/OUTER FOAM FILTER	
31	208947	INNER FOAM FILTER/OUTER FOAM FILTER	
32	208950	FLOAT PAD	

EURO-MATIC.PL - Autoryzowany Sklep Numatic

Numatic International Spare Parts

Model No: **TTV4555/100T, TTB6055/100T, TTB6055/100 , TTB1620/100, TTB1620/100T BOTTOM TANK / BATTERIES/ PUMP ASSEMBLY**

234970
DRAWING: DRW-15296 ISS:A03
16/06/2014

NB: FOR WIRING SEE DRAWING: DRW-11578, DRW-12520, DRW-12523

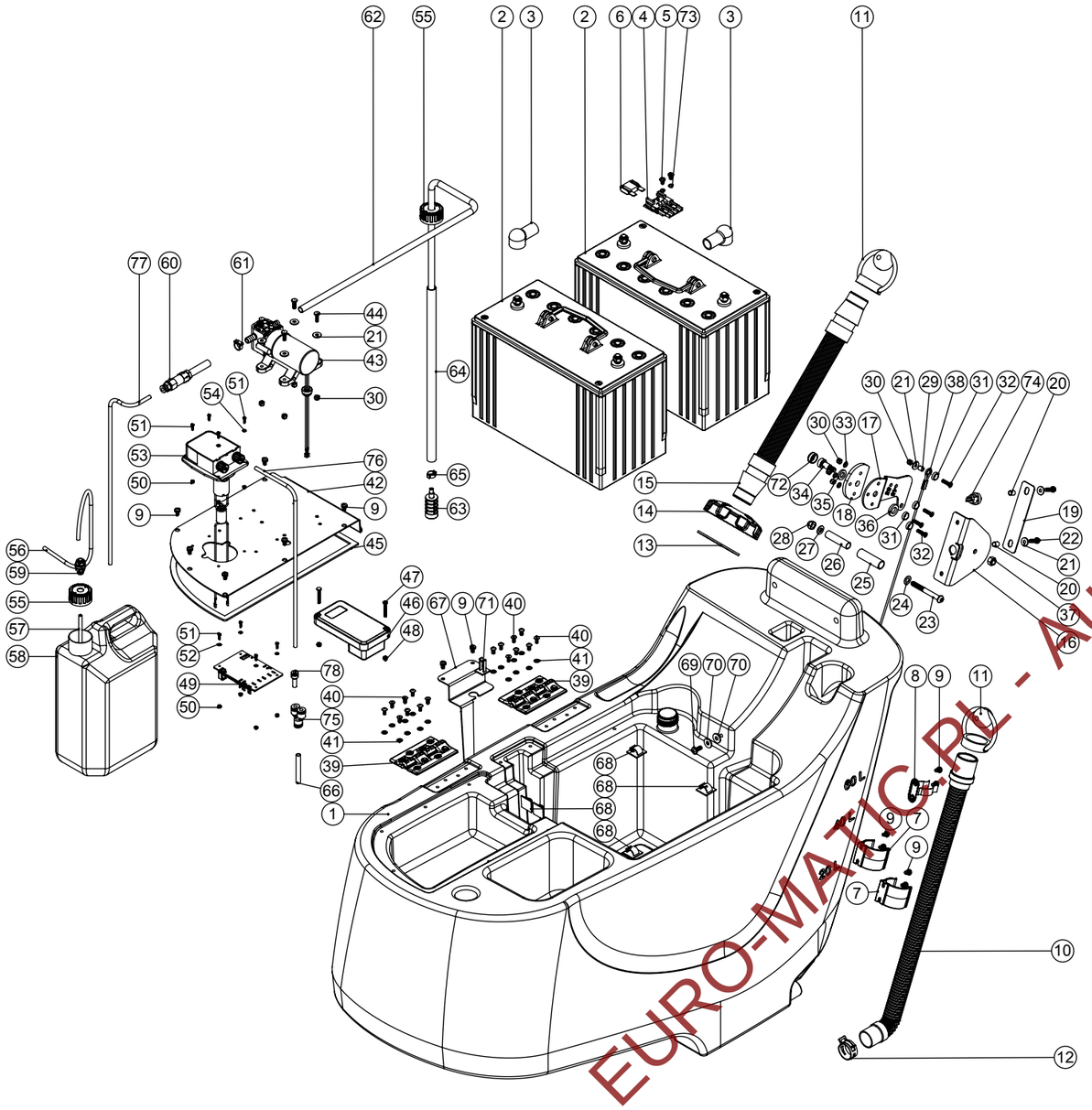

EURO-MATIC PL - Autoryzowany Sklep Numatic

Numatic International Spare Parts

Model No: **TTV4555/100T, TTB6055/100T, TTB6055/100 , TTB1620/100, TTB1620/100T BOTTOM TANK / BATTERIES/ PUMP ASSEMBLY**

ITEM:	PART No:	DESCRIPTION	COMMENTS:
1	237400	TTV4555 BOTTOM TANK	NUMATIC LOGO
	304432	PROCESSED TTV4555/6055 GREY BOTTOM TANK MOULDING (EP)	NO LOGO
2	205112	100 AMP/HOUR REPLACEMENT BATTERY (C/W PACKGING FOR 230138 BATTERY)	
3	206861	RED PVC TERMINAL CAP	
4	230102	FUSE HOLDER RATED AT 60 AMPS	
5	219864	M5 X 8MM LONG POZI PAN SCREW	
6	221107	50 AMP MAXI FUSE (RED)	
7	237382	ACETAL HOSE CLIP MOULDING	
8	206818	HOSE CLIP	
9	219047	M5 X 10MM LONG POZI PAN SEMS SCREW	
10	213025	600MM - 630MM LONG DUMP HOSE ASSEMBLY	
11	304439	PROCESSED HOSE CLOSURE	
12	208471	CONSTANT TENSION CLIP	
13	208564	FILLER CAP SEALING RING	
14	237174	FILLER CAP (WITH MIDDLE HOLE)	
15	206842	420MM LONG BLACK STRETCH HOSE C/W CUFFS	
16	392058	FLOOR TOOL LIFTING BRACKET (2)	
17	392057	FLOOR TOOL LIFTING BRACKET	
18	392082	FLOOR TOOL LIFTING LEVER SWITCH PLATE	
19	392105	FLOOR TOOL SWITCH SKID PLATE	
20	219843	6MM I/D X 9.5MM LONG SPIROL SPACER (STAINLESS STEEL)	
21	219005	M5 FORM A WASHER	
22	219546	M5 X 20MM LONG POZI PAN SEMS SCREW	
23	219806	M8 X 70MM LONG SOCKET BUTTON HEAD BOLT	
24	219578	M8 FORM A STAINLESS STEEL WASHER	
25	391131	53MM LONG BLACK NYLON TUBE	
26	391093	52MM LONG VAC MOTOR SPACER	
27	219018	M8 SHAKEPROOF WASHER	
28	219632	M8 STAINLESS STEEL DOME NUT	
29	219508	SPIROL SPACER	
30	219076	M5 NYLON INSERT NUT	
31	219573	SCREW INSULATOR	
32	219331	M5 X 20MM LONG POZI PAN COUNTERSUNK SCREW	
33	219003	M5 FORM A STEEL WASHER	
34	208332	M8 X 10 X 16MM LONG HEX SOCKET SHOULDER BOLT	
35	219964	NYLON WASHER (18MM O/D X 10.4MM I/D X 3MM THICK)	
36	229346	SPACER	
37	219078	M8 NYLON INSERT NUT	
38	208204	495MM LONG LIFTING LINK WIRE	
39	303954	PLASTIC HINGE ASSEMBLY	
40	291004	M5 X 10MM LONG STAINLESS STEEL BUTTON HEAD SCREW	
41	219355	M5 FORM A STAINLESS STEEL WASHER	
42	392205	TTV4555 PUMP PLATE	
	392295	TTB6055 TRACTION PUMP PLATE	
	392294	TTB6055 PUMP PLATE	
43	321572	WATER PUMP & LEAD ASSEMBLY C/W GROMMET & PUSH ON TERMINALS	
44	219050	M5 X 16MM LONG POZI PAN SCREW	
45	212052	3MM THICK X 9MM WIDE INSEAL	
46	330069	PROGRAMMED MOTOR CONTROLLER (TTV55653/200T C/W VARIABLE TRIGGER SPEED)	TTV4555/100T & TTB6055/100T
47	219321	M4 X 30MM LONG POZI PAN SCREW	TTV4555/100T & TTB6055/100T
48	219083	M4 NYLON INSERT NUT	TTV4555/100T & TTB6055/100T
49	208566	TTV5565/200T DC DRIVE PCB WITH DETERGENT REDUCED FLOW - (WHISPER MODE)	
50	219070	M3 NYLON INSERT NUT	
51	219236	M3 X 10MM LONG SLOT SCREW	TTV4555/100T & TTB6055/100T
52	219501	M3 FORM A STAINLESS STEEL WASHER	TTV4555/100T & TTB6055/100T
53	321569	DETERGENT PUMP & SOLDERED LEAD ASSEMBLY C/W PUSH ON TERMINALS	TTV4555/100T & TTB6055/100T
54	219237	M3 FORM A WASHER	TTV4555/100T & TTB6055/100T
55	303827	PROCESSED BLUE CAP	
56	391358	315MM LONG X 4MM I/D X 6MM O/D FLEXIBLE NYLON TUBE	
57	391358	315MM LONG X 4MM I/D X 6MM O/D FLEXIBLE NYLON TUBE	
58	208320	5 LITRE PLASTIC CONTAINER	
59	208032	6MM BULKHEAD CONNECTOR	
60	208853	8MM PUSH FIT TO 3/8" HOSETAIL NON RETURN VALVE	
61	208840	NYLON HOSE CLAMP 12.0MM-13.8MM	
62	391457	900MM LONG X 8MM I/D X 11MM O/D CLEAR PVC HOSE	
63	208360	WEIGHTED FILTER	
64	208431	CLEAN WATER PIPE SLEEVE	
65	219149	O CLIP 9-11MM	
66	391485	60mm x 8mm x 6mm METRIC NYLON TUBE - BLUE	
67	404141	TTV4555 TANK LIFT SWITCH PLATE - PAINT GREY	
68	220660	CABLE CLIP	
69	219646	M6 X 16MM LONG POZI PAN STAINLESS STEEL SCREW	
70	219008	M6 FORM G WASHER	
71	219464	CLIP (24MM HIGH)	
72	237632	SHOULDER BOLT COVER	
73	219648	M5 SINGLE COIL WASHER	
74	304486	HANDLE SWITCH (5000.0501) LESS COVER	
75	208851	8MM X 8MM EQUAL Y PIECE	
76	391474	600MM LONG X 4MM I/D X 6MM O/D FLEXIBLE NYLON TUBE	
77	391506	670MM LONG X 6MM I/D X8MM O/D FLEXIBLE NYLON TUBE	
78	208854	8MM STEM X 6MM PUSHFIT	

Numatic International Spare Parts

234977
DRAWING: DRW-15314 ISS: A01
12/12/2013

Model No: TTB6055/100T & TTB6055/100 & TTB1620/100T & TTB1620/100
DECK ASSEMBLY EXPLODED DRAWING

NB: FOR WIRING SEE DRAWING: DRW-12520 / DRW-12523

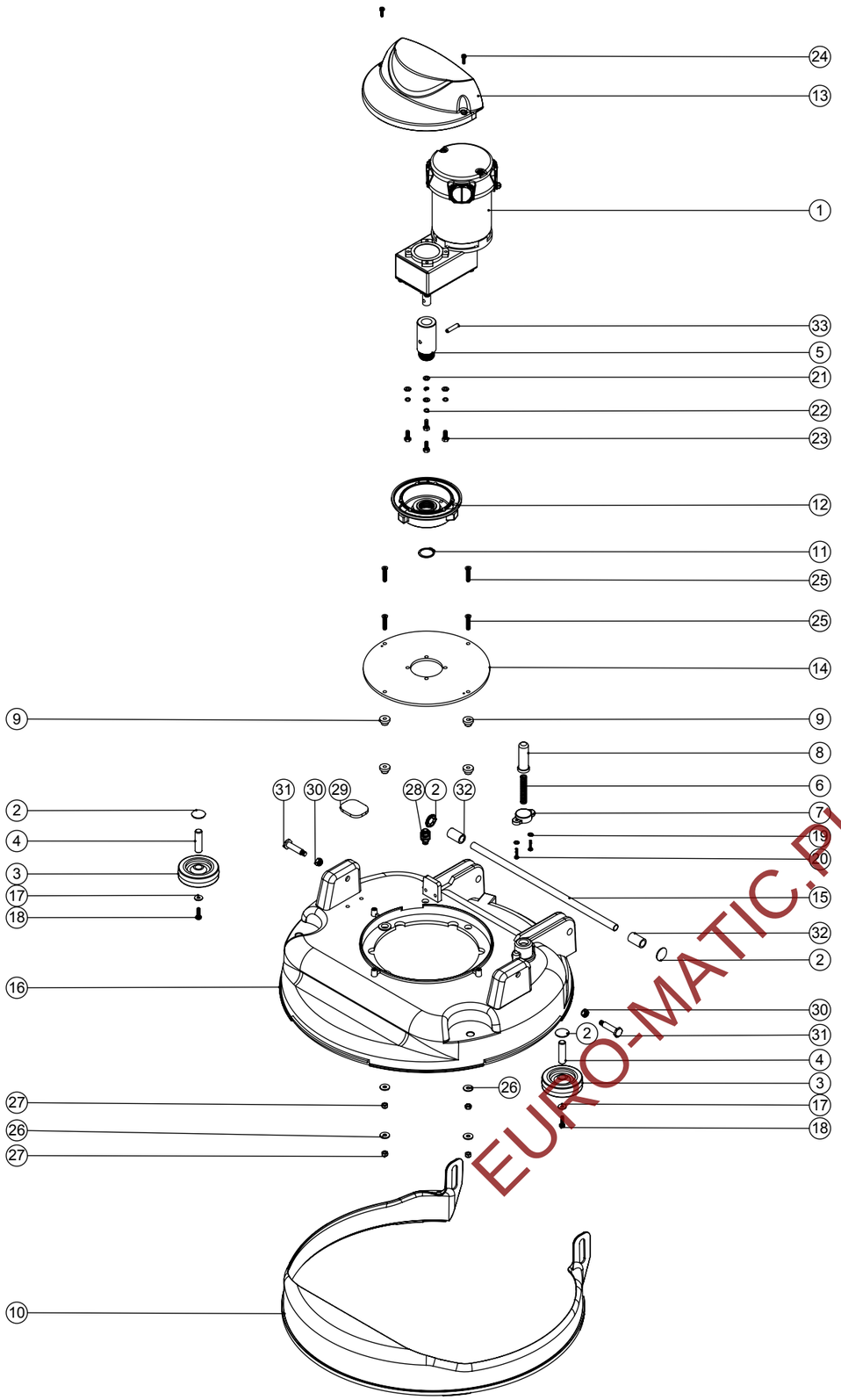

Numatic International Spare Parts

Model No: TTB6055/100T & TTB6055/100 & TTB1620/100T & TTB1620/100
DECK ASSEMBLY EXPLODED DRAWING

ITEM:	PART No:	DESCRIPTION	COMMENTS:
1	205245	AMER BRUSH MOTOR (24V-330W-100RPM-15AMP)	
2	204021	12.7MM STAINLESS STEEL HUB CAP	
3	204068	3 INCH GREY WHEEL	
4	206013	BUFFER WHEEL PIN	
5	208727	DRIVE SHAFT	
6	219692	COMPRESSION SPRING	
7	223242	PLUNGER MOUNTING PLATE MOULDING	
8	229128	PLUNGER	
9	229285	MOTOR MOUNTING SPACER	
10	229562	SPLASH SKIRT MOULDING	
11	230048	26MM EXTERNAL CIRCLIP	
12	230207	DIE CAST CHUCK MACHINED	
13	237380	AMER MOTOR COVER	
14	404166	TTB4045/4055 AMER MOTOR ADAPTOR PLATE PAINT ANTHRACITE GREY	
15	391439	1/2 INCH DIAMETER X 18G STAINLESS STEEL TUBE (0.375)	
16	304404	TTB4055 DECK MOULDING DRILLED (NEW DESIGN)	
17	219005	M5 FORM G WASHER	
18	219546	M5 X 20MM LONG POZI PAN SEMS SCREW	
19	219355	M5 FORM A STAINLESS STEEL WASHER	
20	219568	No8 X 3/4 INCH LONG POZI PAN STAINLESS STEEL SCREW	
21	219870	M6 FORM A WASHER STAINLESS STEEL	
22	219549	M6 SINGLE COIL WASHER	
23	219719	M6 X 16MM LONG HEXAGONAL STAINLESS STEEL HEAD BOLT	
24	219472	M4 X 16MM LONG POZI PAN SEMS SCREW	
25	201031	M6 X 30MM LONG STAINLESS STEEL COUNTERSUNK POZI PAN SCREW	
26	219008	M6 FORM G WASHER	
27	219642	M6 STAINLESS STEEL NYLON INSERT NUT	
28	208032	6MM BULKHEAD CONNECTOR	
29	202098	FOOT PEDAL PAD	
30	219857	M8 NYLON INSERT HALF NUT	
31	206236	PIVOT PIN	
32	208769	NATUARL NYLON SPACER (12.8x18x30)	
33	291079	6MM X 30MM STAINLESS STEEL ROLL PIN	

EURO-MATIC.PL - Autoryzowany sklep Numatic

Numatic International Spare Parts

Model No: TTB6055/100 & TTB1620 CHARGER / CHASSIS ASSEMBLY

234969
DRAWING: DRW-15332 ISS:A03
16/06/2014

NB: FOR WIRING SEE DRAWING: DRW-12523, DRW-15722

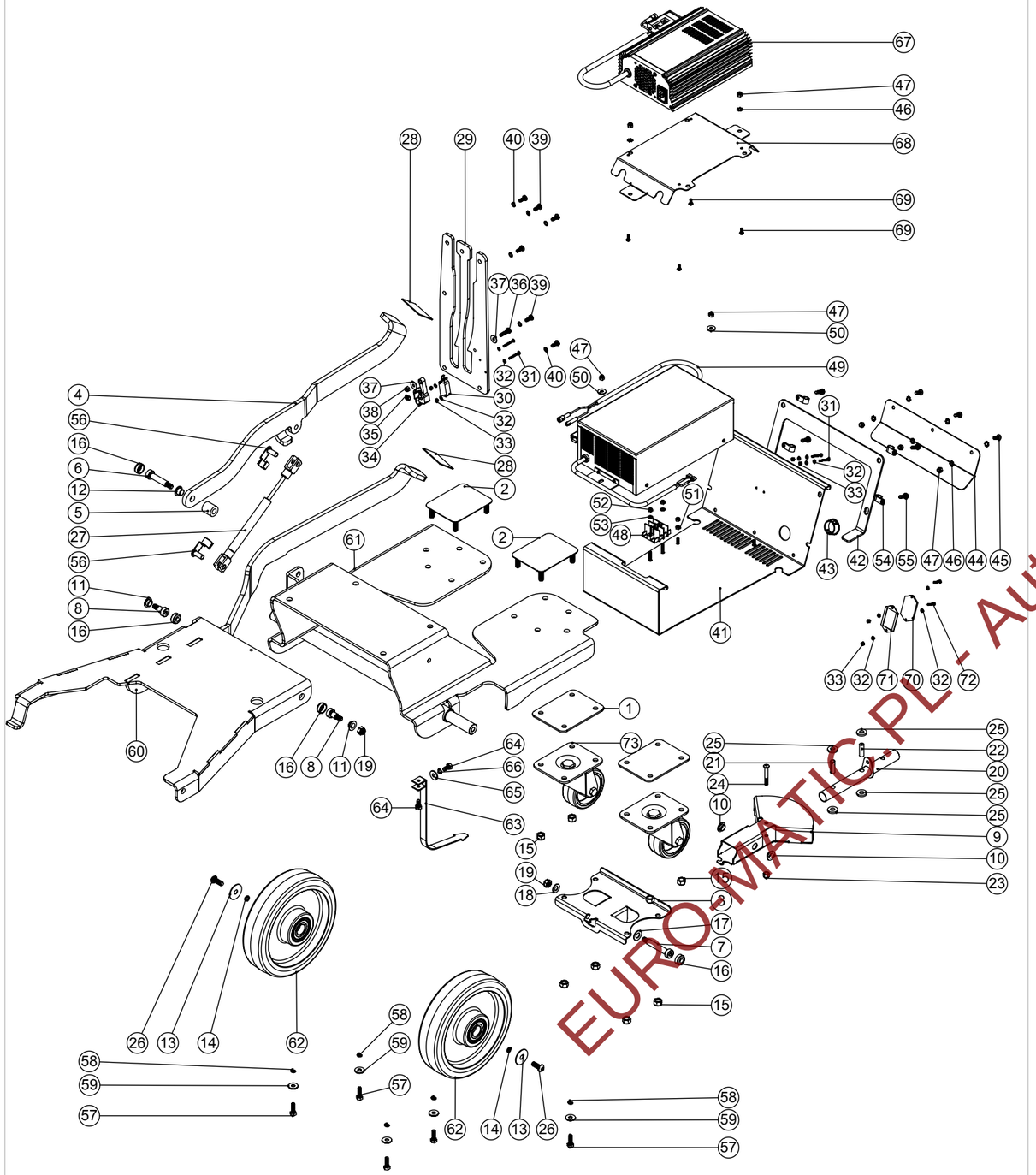

Numatic International Spare Parts

Model No: TTB6055/100 & TTB1620 CHARGER / CHASSIS ASSEMBLY

ITEM:	PART No:	DESCRIPTION	COMMENTS:
1	329581	CASTOR ADAPTOR SPACER	
2	304367	TTV4555 CASTOR FIXING PLATE C/W WELD STUDS	
3	404130	TTV4555 FLOOR TOOL LIFTING PIVOT BRACKET	
4	404131	TTV4555 EXTRA LOAD PEDAL Z/PL	
5	208350	NYLON SPACER I/D 10.2MM X O/D 20.0MM X LENGTH 21.0MM	
6	208355	M8 X 10 X 40MM LONG HEX SOCKET SHOULDER BOLT	
7	208333	M8 X 10 X 50MM LONG HEX SOCKET SHOULDER BOLT	
8	208313	M8 X 10 X 12MM LONG HEX SOCKET SHOULDER BOLT	
9	304361	TTV4555 FLOOR TOOL LIFTING PLATE WELD ASSEMBLY	
10	208312	IGUS BEARING (GFM 101205)	
11	208330	IGUS BEARING (GFM 101206)	
12	208331	IGUS BEARING (GFM 101209)	
13	219877	M8 X 30 STAINLESS STEEL WASHER	
14	219898	M8 SINGLE COIL STAINLESS STEEL WASHER	
15	219078	M8 NYLON INSERT NUT	
16	237632	SHOULDER BOLT COVER	
17	219903	M10 FORM A STAINLESS STEEL WASHER	
18	219010	M8 FORM A WASHER	
19	219857	M8 NYLON INSERT HALF NUT	
20	304364	TTV4555 FLOOR TOOL PIVOT TUBE ASSEMBLY	
21	206954	SPIRO SPACER	
22	206963	VERTICAL NYLON SPACER	
23	219088	M6 NYLON INSERT NUT	
24	219807	M6 X 40MM LONG SOCKET BUTTON HEAD BOLT	
25	206964	SLIDE NYLON SPACER	
26	219823	M8 X 20MM LONG STAINLESS STEEL SOCKET BUTTON HEAD BOLT	
27	208335	GAS STRUT	
28	391372	FOOT PEDAL PAD	
29	404132	TTV4555 FOOT PEDAL GUIDE PLATE - Z/PL	
30	220183	SNAP ACTION SWITCH	
31	219519	M3 X 25MM LONG POZI PAN SCREW	
32	219237	M3 FORM A WASHER	
33	219070	M3 NYLON INSERT NUT	
34	227587	CENTRE SWITCH OPERATING LEVER MOULDING	
35	219804	SWITCH COMPRESSION SPRING	
36	219571	M5 X 20MM LONG POZI PAN STAINLESS STEEL SCREW	
37	219644	M5 FORM G STAINLESS STEEL WASHER	
38	219633	M5 STAINLESS STEEL NYLON INSERT NUT	
39	219049	M5 X 12MM LONG POZI PAN SCREW	
40	219016	M5 SHAKEPROOF WASHER	
41	404062	CHARGER PLATE WELDED ASSEMBLY (PAINTED GREY)	MODELS WITH MENTZER CHARGER
	404192	TTV4555/TTB6055 NORD CHARGER PLATE WELD ASSEMBLY PAINTED GREY	MODELS WITH NORD CHARGER
42	208337	CHARGER PLATE GASKET	
43	206314	WINDOW PLUG	MODELS WITH MENTZER CHARGER
44	404140	TTV4555 CHARGER SPLASH SKIRT PAINT GREY	
45	219740	M5 X 12MM LONG STAINLESS STEEL POZI PAN SCREW	
46	291020	M5 STAINLESS STEEL EXTERNAL SHAKEPROOF LOCK WASHER	
47	219076	M5 NYLON INSERT NUT	
48	220114	2 WAY TERMINAL BLOCK	MODELS WITH MENTZER CHARGER
49	230186	220-240V MENTZER 35 AMP CHARGER (190MM WIRE VERSION)	MODELS WITH MENTZER CHARGER, SPARE PART: 310083
	230185	110-120V MENTZER 30 AMP CHARGER (190MM WIRE VERSION)	MODELS WITH MENTZER CHARGER, SPARE PART: 310032
50	219005	M5 FORM G WASHER	
51	219075	M4 FULL NUT	
52	219083	M4 NYLON INSERT NUT	
53	219206	M4 FORM A WASHER	
54	219393	P CLIP	
55	219045	M5 X 16MM LONG POZI PAN SEMS SCREW	
56	208634	GAS RAM CLEVIS CLIP	
57	219976	M6 X 20MM LONG HEXANGONAL HEAD SET SCREW	
58	219718	M6 STAINLESS STEEL SPRING WASHER	
59	219647	M6 FORM G STAINLESS STEEL WASHER	
60	404170	TTB6055 DECK LIFTING LINK Z/PL	
61	404169	TTB6055 NON TRACTION CHASSIS WELD ASSEMBLY PAINTED GREY	
62	208662	200mm WHEEL	
63	208765	ANTI STATIC STRIP	
64	219916	M6.12MM LG.HEXAGONAL HEAD.SCREW.STAINLESS STEEL	
65	219008	M6 FORM G WASHER	
66	219544	M6 SHAKEPROOF WASHER	
67	230141	115V/24V/10 AMP HF NORD CHARGER (D11 REMOVED & REPLCED WITH LINK WIRE)	MODELS WITH NORD CHARGER
68	404192	TTV NORD ADAPTER PAINTED GREY	MODELS WITH NORD CHARGER
69	219301	No6 X 3/8 INCH LONG POZI PAN SELF TAP SCREW	MODELS WITH NORD CHARGER
70	392357	TTB CHARGER VIEWING GLASS	MODELS WITH NORD CHARGER
71	208577	HOURS METER GASKET	MODELS WITH NORD CHARGER
72	219038	M3 X 16MM LONG SLOT SCREW	MODELS WITH NORD CHARGER
73	204116	HEAVY DUTY CASTOR. BLUE TYRE	

EURO-MATIC.PL - Autoryzowany sklep Numatic

Numatic International Spare Parts

234967
DRAWING: DRW-15188 ISS:A07
30/09/2014

Model No: TTV4555/100T & TTB6055/100T & TTB1620/100T CHARGER / CHASSIS / PEDAL ASSEMBLY

NB: FOR WIRING SEE DRAWING: DRW-11578, DRW-12520, DRW-15721

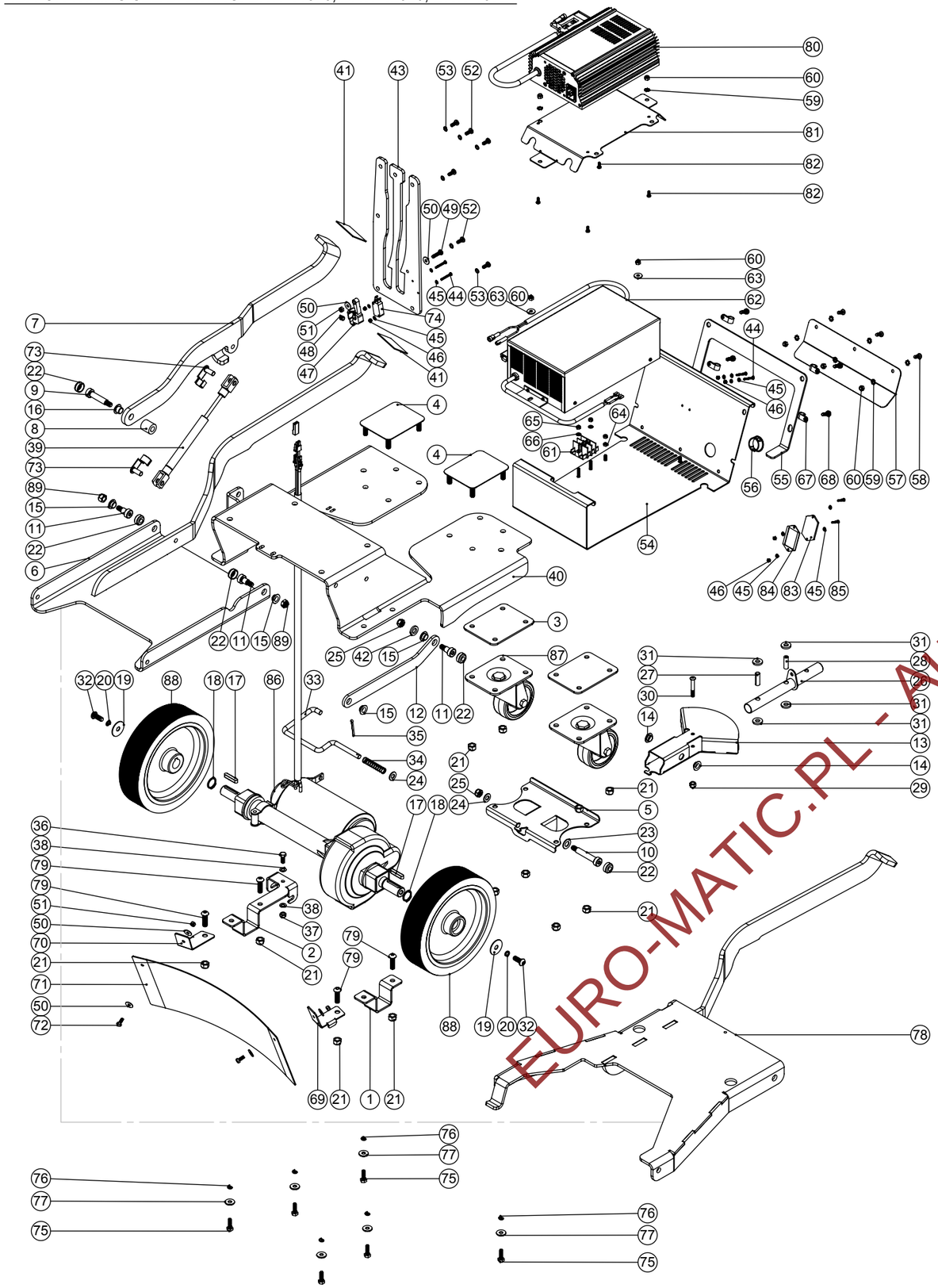

Numatic International Spare Parts

Model No: TTV4555/100T & TTB6055/100T & TTB1620/100T CHARGER / CHASSIS / PEDAL ASSEMBLY

ITEM:	PART No:	DESCRIPTION	COMMENTS:
1	329497	TRANSAXLE MOUNTING BRACKET	
2	392217	TTV4555 BRAKE LEVER AND AXLE CLAMP	
3	329581	CASTOR ADAPTOR SPACER	
4	304367	TTV4555 CASTOR FIXING PLATE C/W WELD STUDS	
5	404130	TTV4555 FLOOR TOOL LIFTING PIVOT BRACKET	
6	404132	TTV4555 DECK LIFTING PLATE WELD ASSEMBLY - Z/PL	TTV4555/100T ONLY
7	404131	TTV4555 EXTRA LOAD PEDAL Z/PL	
8	208350	NYLON SPACER I/D 10.2MM X O/D 20.0MM X LENGTH 21.0MM	
9	208355	M8 X 10 X 40MM LONG HEX SOCKET SHOULDER BOLT	
10	208333	M8 X 10 X 50MM LONG HEX SOCKET SHOULDER BOLT	
11	208313	M8 X 10 X 12MM LONG HEX SOCKET SHOULDER BOLT	
12	404175	TTV4555 PARALLEL LINK ZINC PLATED	TTV4555/100T ONLY
13	304361	TTV4555 FLOOR TOOL LIFTING PLATE WELD ASSEMBLY	
14	208312	IGUS BEARING (GFM 101205)	
15	208330	IGUS BEARING (GFM 101206)	
16	208331	IGUS BEARING (GFM 101209)	
17	206744	6MM X 6MM X 32MM FEATHER KEY	
18	219889	19MM HEAVY DUTY CIRCLIP	
19	219877	M8 X 30 STAINLESS STEEL WASHER	
20	219898	M8 SINGLE COIL STAINLESS STEEL WASHER	
21	219078	M8 NYLON INSERT NUT	
22	237632	SHOULDER BOLT COVER	
23	219903	M10 FORM A STAINLESS STEEL WASHER	
24	219010	M8 FORM A WASHER	
25	219857	M8 NYLON INSERT HALF NUT	
26	304364	TTV4555 FLOOR TOOL PIVOT TUBE ASSEMBLY	
27	206954	SPIRO SPACER	
28	206963	VERTICAL NYLON SPACER	
29	219088	M6 NYLON INSERT NUT	
30	219807	M6 X 40MM LONG SOCKET BUTTON HEAD BOLT	
31	206964	SLIDE NYLON SPACER	
32	219823	M8 X 20MM LONG STAINLESS STEEL SOCKET BUTTON HEAD BOLT	
33	304370	TTV4555 BRAKE LEVER	
34	219326	50MM LONG COMPRESSION SPRING	
35	219317	3.2MM X 28MM SPLIT COTTER PIN	
36	210719	M6 X 16MM LONG HEXAGONAL STAINLESS STEEL HEAD BOLT	
37	219642	M6 STAINLESS STEEL NYLON INSERT NUT	
38	219560	M6 FORM B STAINLESS STEEL WASHER	
39	208325	GAS STRUT	
40	304363	TTV4555 CHASSIS WELD ASSEMBLY	
41	391372	FOOT PEDAL PAD	
42	219964	NYLON WASHER (18MM O/D X 10.4MM I/D X 3MM THICK)	
43	404142	TTV4555 FOOT PEDAL GUIDE PLATE - Z/PL	
44	219519	M3 X 25MM LONG POZI PAN SCREW	
45	219237	M3 FORM A WASHER	
46	219070	M3 NYLON INSERT NUT	
47	227587	CENTRE SWITCH OPERATING LEVER MOULDING	
48	219804	SWITCH COMPRESSION SPRING	
49	219571	M5 X 20MM LONG POZI PAN STAINLESS STEEL SCREW	
50	219644	M5 FORM G STAINLESS STEEL WASHER	
51	219633	M5 STAINLESS STEEL NYLON INSERT NUT	
52	219049	M5 X 12MM LONG POZI PAN SCREW	
53	219016	M5 SHAKEPROOF WASHER	
54	404062	CHARGER PLATE WELDED ASSEMBLY (PAINTED GREY)	MODELS WITH MENTZER CHARGER
	404192	TTV4555/TTB6055 NORD CHARGER PLATE WELD ASSEMBLY PAINTED GREY	MODELS WITH NORD CHARGER
55	208337	CHARGER PLATE GASKET	
56	206314	WINDOW PLUG	MODELS WITH MENTZER CHARGER
57	404140	TTV4555 CHARGER SPLASH SKIRT PAINT GREY	
58	219740	M5 X 12MM LONG STAINLESS STEEL POZI PAN SCREW	
59	291020	M5 STAINLESS STEEL EXTERNAL SHAKEPROOF LOCK WASHER	
60	219076	M5 NYLON INSERT NUT	
61	220114	2 WAY TERMINAL BLOCK	MODELS WITH MENTZER CHARGER
62	230186	220-240V MENTZER 35 AMP CHARGER (190MM WIRE VERSION)	MODELS WITH MENTZER CHARGER, SPARE PART: 310083
	230185	110-120V MENTZER 30 AMP CHARGER (190MM WIRE VERSION)	MODELS WITH MENTZER CHARGER, SPARE PART: 310032
63	219005	M5 FORM G WASHER	
64	219075	M4 FULL NUT	
65	219083	M4 NYLON INSERT NUT	
66	219206	M4 FORM A WASHER	
67	219393	P CLIP	
68	219045	M5 X 16MM LONG POZI PAN SEMS SCREW	
69	304492	TTV4555 LEFT HAND SPLASH GUARD BRACKET PAINTED GRAPHITE	TTV4555/100T ONLY
70	304493	TTV4555 RIGHT HAND SPLASH GUARD BRACKET PAINTED GRAPHITE	TTV4555/100T ONLY
71	392363	TTV4555 SPLASH GUARD	TTV4555/100T ONLY
72	219498	M5 X 12MM LONG STAINLESS STEEL HEX SCREW	
73	208634	GAS RAM CLEVIS CLIP	
74	229483	SNAP ACTION SWITCH	
75	219976	M6 X 20MM LONG HEXANGONAL HEAD SET SCREW	
76	219718	M6 STAINLESS STEEL SPRING WASHER	
77	219647	M6 FORM G STAINLESS STEEL WASHER	
78	404170	TTB6055 DECK LIFTING LINK Z/PL	TTB6055/100T & TTB1620/100TONLY
79	219555	M8 X 25MM LONG SOCKET BOLT	
80	230141	115V/24V/10 AMP HF NORD CHARGER (D11 REMOVED & REPLCED WITH LINK WIRE)	MODELS WITH NORD CHARGER
81	404192	TTV NORD ADAPTER PAINTED GREY	MODELS WITH NORD CHARGER
82	219301	No6 X 3/8 INCH LONG POZI PAN SELF TAP SCREW	MODELS WITH NORD CHARGER
83	392357	TTB CHARGER VIEWING GLASS	MODELS WITH NORD CHARGER
84	208577	HOURS METER GASKET	MODELS WITH NORD CHARGER
85	219038	M3 X 16MM LONG SLOT SCREW	MODELS WITH NORD CHARGER
86	321700	465MM LONG ASI TRANSAXLE C/W SHORTNED 850MM WIRES	
87	204116	HEAVY DUTY CASTOR. BLUE TYRE	
88	204115	200MM X 50MM TRACTION WHEEL - GREY PU TREAD COMBED PROFILE	
89	219639	M8 STAINLESS STEEL NYLON INSERT NUT	

EURO-MATIC.PL - Autoryzowany Serwis Numatic

Numatic International Spare Parts

Model No: 650MM & 750MM ALUMINIUM FLOOR TOOL ASSEMBLY

234954
DRAWING: DRW-13428 ISS:A03
12/06/2014

NB: FOR WIRING SEE DRAWING: WD-0???

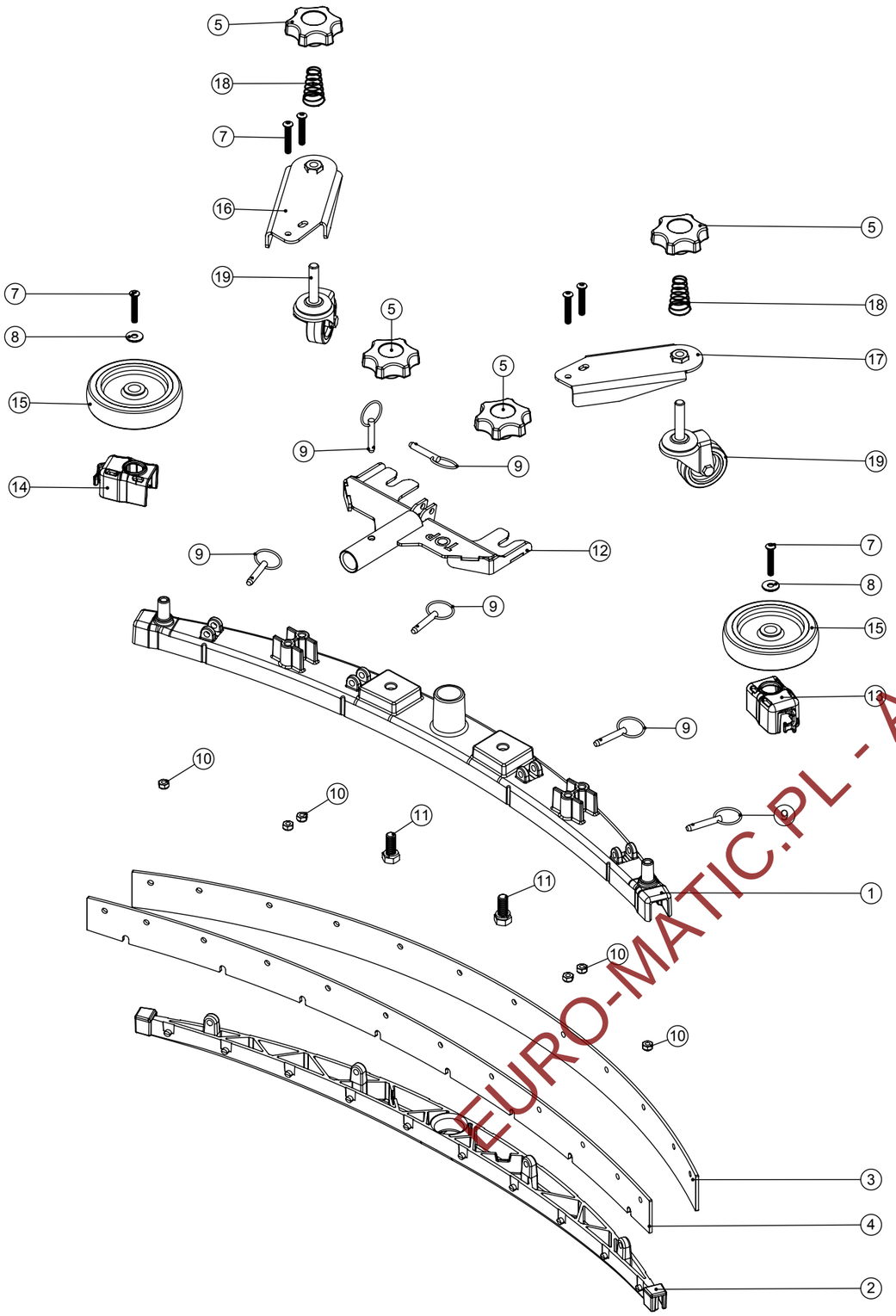

Numatic International Spare Parts

Model No: 650MM & 750MM ALUMINIUM FLOOR TOOL ASSEMBLY

ITEM:	PART No:	DESCRIPTION	COMMENTS:
1	208198	(650MM SCRUB WIDTH) ALUMINIUM SQUEEGEE CASTING (38MM HOSE FITTING)	
	208637	(750MM SCRUB WIDTH) ALUMINIUM SQUEEGEE CASTING (38MM HOSE FITTING)	
2	229987	(650MM SCRUB WIDTH) BLADE HOLDER MOULDING (SLOPING PROFILE) (32MM & 38MM HOSE FITTING)	
	237624	(750MM SCRUB WIDTH) BLADE HOLDER MOULDING (SLOPING PROFILE) (32MM & 38MM HOSE FITTING)	
3	206978	(650MM SCRUB WIDTH) REPLACEMENT (3.2MM / 43 SHORE A) REAR POLY/BLADE (847MM LONG)	
	208203	(650MM SCRUB WIDTH) REPLACEMENT (4.0MM / 40 SHORE A) REAR RED LINATEX PREMIUM NATURAL RUBBER /BLADE (847MM LONG)	
	208642	(750MM SCRUB WIDTH) REPLACEMENT (3.2MM / 43 SHORE A) REAR POLY/BLADE (1000MM LONG)	
	208640	(750MM SCRUB WIDTH) REPLACEMENT (4.0MM / 40 SHORE A) REAR RED LINATEX PREMIUM NATURAL RUBBER /BLADE (1000MM LONG)	
4	206977	(650MM SCRUB WIDTH) REPLACEMENT (3.2MM / 43 SHORE A) FRONT POLY/BLADE (819MM LONG)	
	208201	(650MM SCRUB WIDTH) REPLACEMENT (3.2MM / 40 SHORE A) FRONT RED LINATEX PREMIUM NATURAL RUBBER /BLADE (819MM LONG)	
	208641	(750MM SCRUB WIDTH) REPLACEMENT (3.2MM / 43 SHORE A) FRONT POLY/BLADE (968MM LONG)	
	208639	(750MM SCRUB WIDTH) REPLACEMENT (3.2MM / 40 SHORE A) FRONT RED LINATEX PREMIUM NATURAL RUBBER /BLADE (968MM LONG)	
5	208354	M10 LOBE KNOB	
6	219899	M10 SINGLE COIL STAINLESS STEEL WASHER	
7	219933	M6 X 35MM SOCKET BUTTON HEAD BOLT STAINLESS STEEL	
8	219647	M6 FORM G STAINLESS STEEL WASHER	
9	206953	DETENT PINS	
10	219642	M6 STAINLESS STEEL NYLON INSERT NUT	
11	219909	M10 X 25MM LONG HEXAGONAL STAINLESS STEEL SCREW	
12	304466	FLOOR TOOL BRACKET ASSEMBLY (TT/TTB4045/4055)	
	303795	FLOOR TOOL BRACKET ASSEMBLY (TRO 650 /TTV 678)	TTV678 & TRO650
13	237322	RIGHT HAND FLOOR TOOL CLIP MOULDING	
14	237323	LEFT HAND FLOOR TOOL CLIP MOULDING	
15	208796	4 INCH WHEEL	
16	304441	ADJUSTABLE WIDE ANGLE FLOOR TOOL CASTOR PLATE LHS WELD ASSEMBLY	
17	304440	ADJUSTABLE WIDE ANGLE FLOOR TOOL CASTOR PLATE RHS WELD ASSEMBLY	
18	229175	CONICAL SPRING	
19	208497	50MM C50MM DIAMETER GREY TPR TYRED SWIVEL CASTORS C/W M10 X 45 SWAGED STEMASTOR/GREY RUBBER TYRE	

EURO-MATIC.PL - Autoryzowany Sklep Numatic

THIRD ANGLE PROJECTION

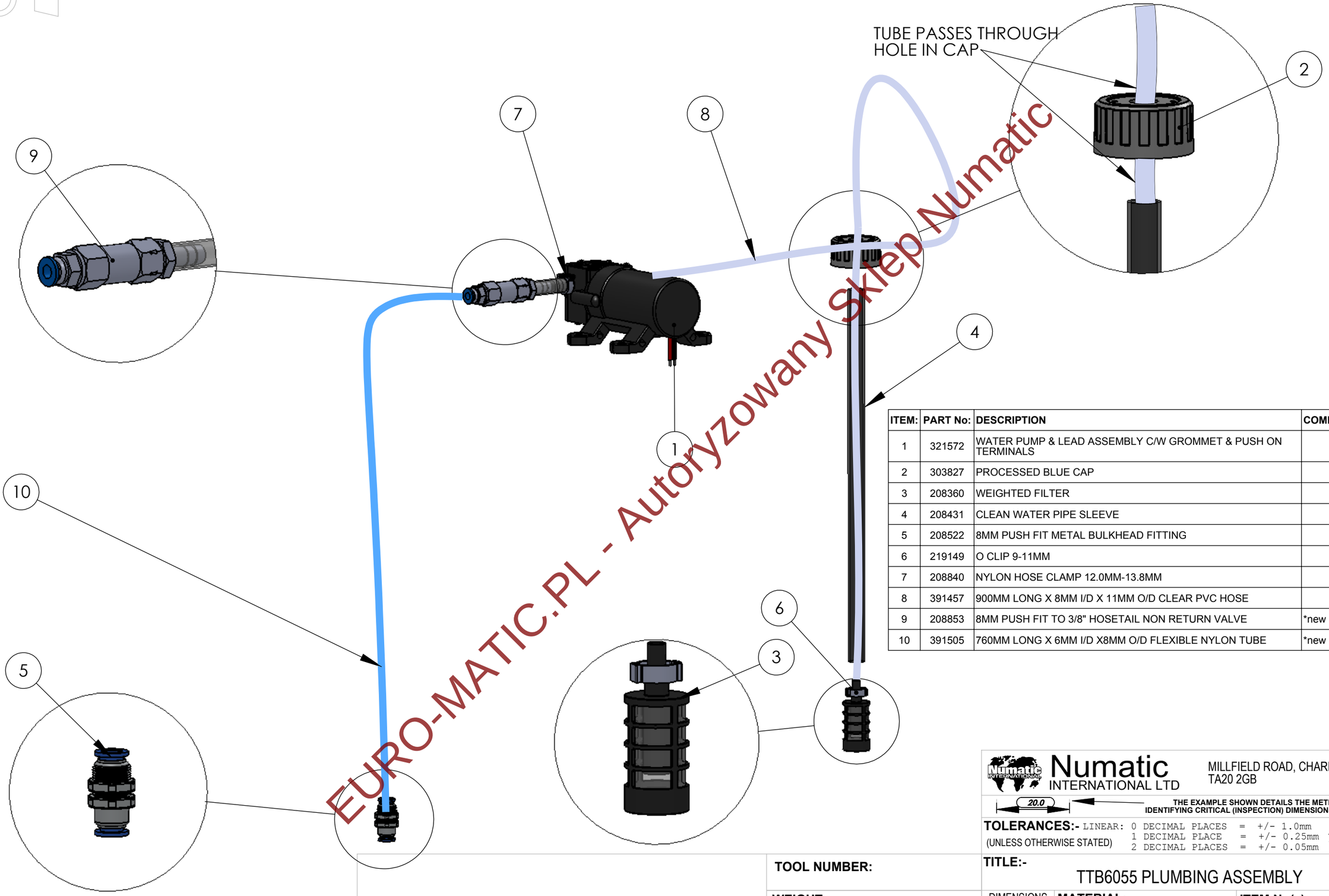

EURO-MATIC.PL - Autoryzowany Sklep Numatic

ITEM:	PART No:	DESCRIPTION	COMMENTS:
1	321572	WATER PUMP & LEAD ASSEMBLY C/W GROMMET & PUSH ON TERMINALS	
2	303827	PROCESSED BLUE CAP	
3	208360	WEIGHTED FILTER	
4	208431	CLEAN WATER PIPE SLEEVE	
5	208522	8MM PUSH FIT METAL BULKHEAD FITTING	
6	219149	O CLIP 9-11MM	
7	208840	NYLON HOSE CLAMP 12.0MM-13.8MM	
8	391457	900MM LONG X 8MM I/D X 11MM O/D CLEAR PVC HOSE	
9	208853	8MM PUSH FIT TO 3/8" HOSETAIL NON RETURN VALVE	*new item
10	391505	760MM LONG X 6MM I/D X8MM O/D FLEXIBLE NYLON TUBE	*new item

Numatic INTERNATIONAL LTD
MILLFIELD ROAD, CHARD, SOMERSET
TA20 2GB ENGLAND

20.0 THE EXAMPLE SHOWN DETAILS THE METHOD USED FOR IDENTIFYING CRITICAL (INSPECTION) DIMENSIONS WHERE APPLICABLE

TOLERANCES:- (UNLESS OTHERWISE STATED)
LINEAR: 0 DECIMAL PLACES = +/- 1.0mm
1 DECIMAL PLACE = +/- 0.25mm
2 DECIMAL PLACES = +/- 0.05mm
ANGULAR:- +/- 0.5 DEGREE

TOOL NUMBER:

WEIGHT:

All components must be ROHS compliant.

TITLE:- TTB6055 PLUMBING ASSEMBLY

DIMENSIONS IN MILLIMETERS

MATERIAL:-

ITEM No(s):- 577930 577976

NOT TO SCALE

FINISH:-

DRG No:- DRW-15329

REVISION:	CHANGE DETAIL:	DRAWN:	APPD:	DATE:
A01	-	piotrb	nickp	06/12/2013

THIS DRAWING IS COPYRIGHT AND IS THE PROPERTY OF NUMATIC INTERNATIONAL LTD. AND MUST NOT BE USED WITHOUT THEIR KNOWLEDGE NOR COMMUNICATED TO ANY PERSON OR COMPANY.

PRINT SIZE **A3**

ST_Numatic_A3.slddrt 20030224

EURO-MATIC.PL - Autoryzowany Sklep Numatic

WIRING DIAGRAM

COMP. No	DRG. No
123388	DRW–12523

TTB6055/100 (HI–LO) / WIRING DIAGRAM

ISSUE	REVISION	DRAWN	APPD.	DATE
A05	REVISION OF PCB 208705 UPDATED REF ECO16250	AM	MC	10/12/13

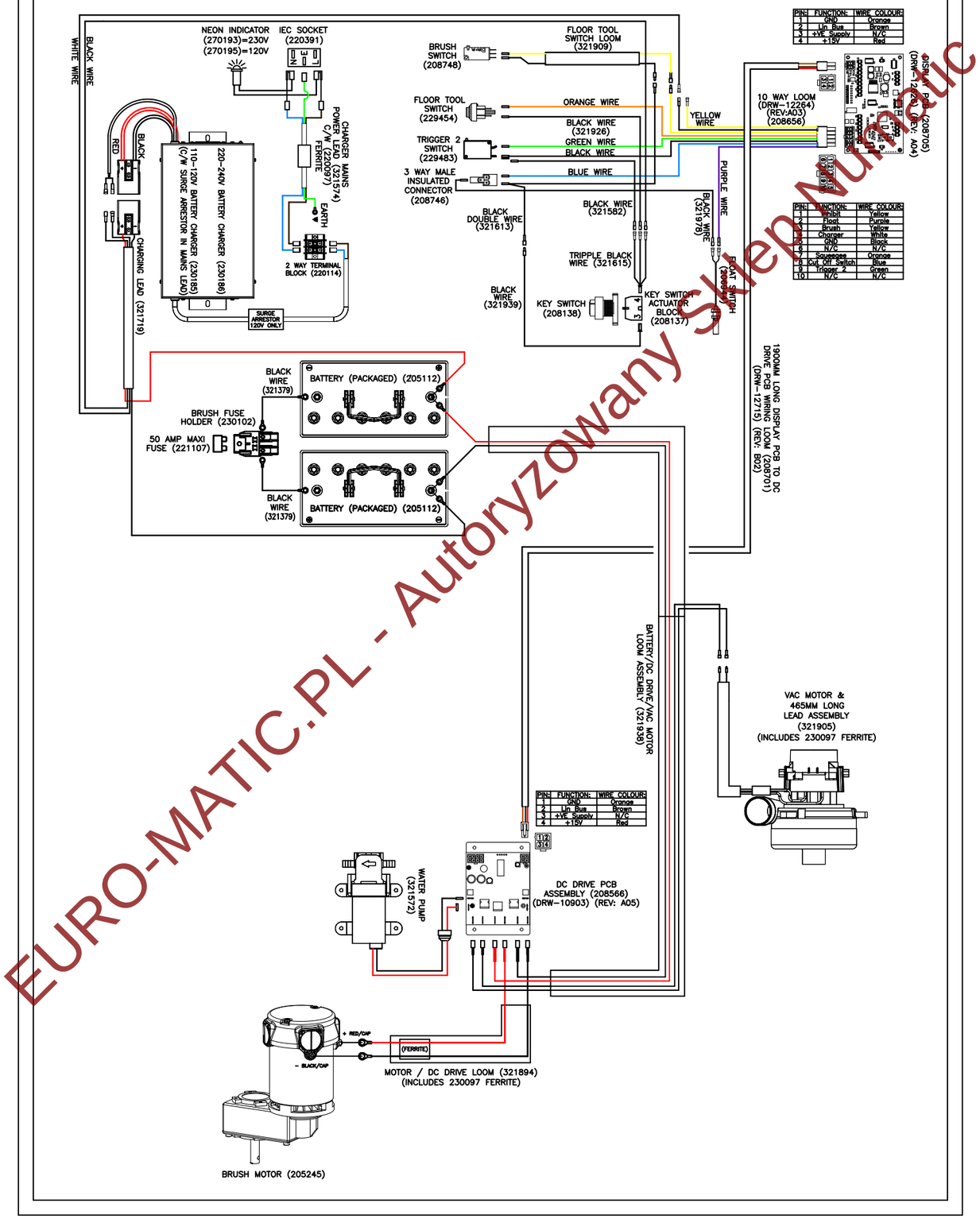

EURO-MATIC.PL - Autoryzowany Sklep Numatic

EURO-MATIC.PL - Autoryzowany Sklep Numatic

WIRING DIAGRAM

COMP. No	DRG. No
123387	DRW-12520

TTB6055/100T VARIABLE TRIGGER SPEED / (HI-LO) / WIRING DIAGRAM

ISSUE	REVISION	DRAWN	APPD.	DATE
A04	(208636) LOOM UPDATED. SPEED LIMIT NOW (270316). (208764) REPLACED TANK SWITCH. WIRE (321978) REPLACED (321910) . DISPALY PCB (208716) NOW A02. (208748) SWITCH WAS (229483).	AM	MC	04/02/13

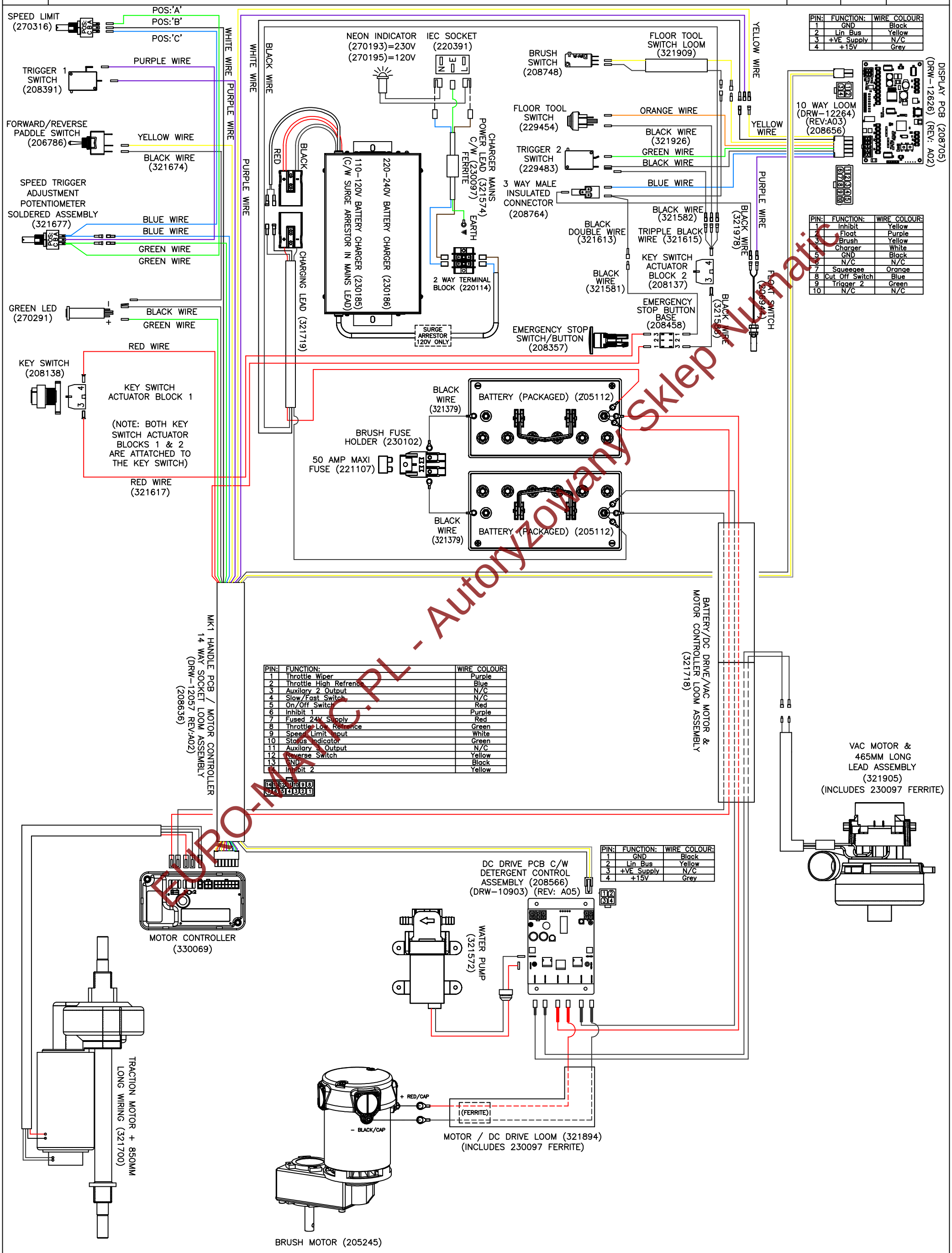

PIN:	FUNCTION:	WIRE COLOUR:
1	GND	Black
2	Lin Bus	Yellow
3	+VE Supply	N/C
4	+15V	Grey

PIN:	FUNCTION:	WIRE COLOUR:
1	Inhibit	Yellow
2	Float	Purple
3	Brush	Yellow
4	Charger	White
5	GND	Black
6	N/C	N/C
7	Squeegee	Orange
8	Cut Off Switch	Blue
9	Trigger 2	Green
10	N/C	N/C

PIN:	FUNCTION:	WIRE COLOUR:
1	Throttle Wiper	Purple
2	Throttle High Refrence	Blue
3	Auxilary 2 Output	N/C
4	Slow/Fast Switch	N/C
5	On/Off Switch	Red
6	Inhibit 1	Purple
7	Fused 24V Supply	Red
8	Throttle Low Refrence	Green
9	Speed Limit Input	White
10	Status Indicator	Green
11	Auxilary 3 Output	N/C
12	Reverse Switch	Yellow
13	GND	Black
14	Inhibit 2	Yellow

PIN:	FUNCTION:	WIRE COLOUR:
1	GND	Black
2	Lin Bus	Yellow
3	+VE Supply	N/C
4	+15V	Grey

EURO-MATIC.PL - Autoryzowany Sklep Numatic