PPR370 Exploded Spares

PROVAC PLUGGED REELER VACUUM RANGE

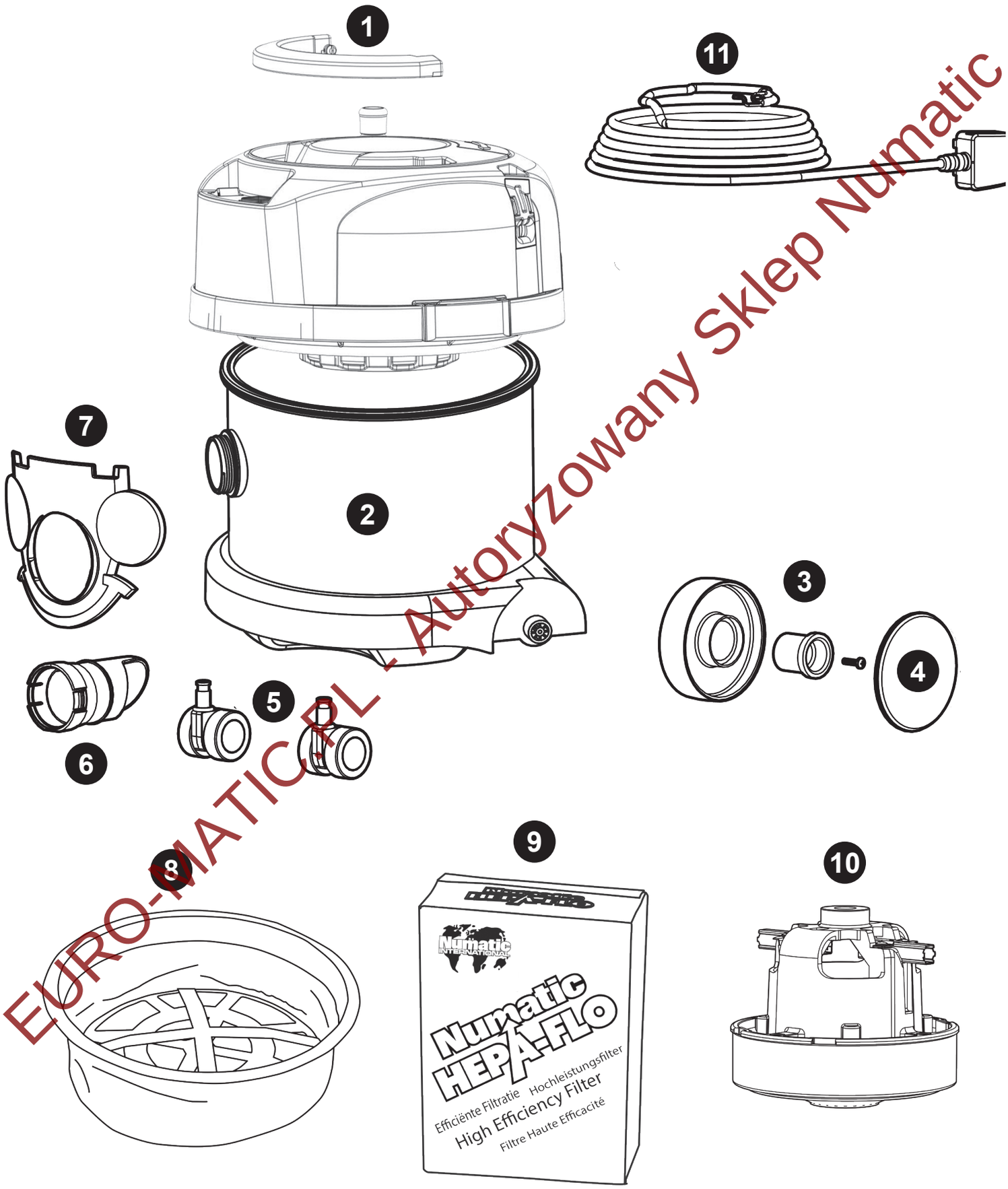

EURO-MATIC.PL - Autoryzowany Sklep Numatic

Części zamienne do Numatic PPR370 – sprawdź w euro-matic.pl ›

Autoryzowany sklep euro-matic.pl · infolinia 505 605 601 · sklep@euro-matic.pl

Num	DESCRIPTION	Num
1	PPR (PLUGGED) HANDLE	**237396**
2	12 INCH 370 DRUM WITH ACCESSORY WITH STORAGE (RED) + FACE	**908688**
3	WHEEL HUB FOR 2 SHOT WHEEL	**227868**
	HENRY WHEEL 2 SHOT MOULDING	**227640**
	NO8.5/8 INCH LONG POZO-PAN SCREW Z/PL PLASTITE	**219105**
4	COLOURED WHEEL DISC (RED)	**227687**
5	50MM TWIN WHEEL CASTOR WITH PU TYRE	**204111**
6	DRY DIFFUSER NECK	**237119**
7	RED HENRY SNAP FIT FACE	**901606**
8	12” TRITEX FILTER (DRY ONLY USE)	**909559**
9	PACK OF 10 NVM-2BH HEPAFLO BAGS	**604016**
10	230V SINGLE STAGE TF MOTOR (DLI 653T) TCO (6210820147)	**908947**
11	12.5 METRE X 0.75MM X 2 CORE (UK PLUG). **911501**	8 METRE X 18AWG X 2 CORE CABLE (CSA PLUG) **911508**
	12.5 METRE X 0.75MM X 2 CORE (EUROPEAN PLUG) **911506**	12.5 METRE X 0.75MM X 2 CORE (SOUTH AFRICA PLUG) **911504**
	12.5 METRE X 0.75MM X 2 CORE (SWISS PLUG) **911505**	102.5 METRE X 0.75MM X 2 CORE (AUSTRALIA PLUG) **911498**

EURO-MATIC.PL - Autoryzowany Sklep Numatic

Części zamienne do Numatic PPR370: euro-matic.pl › infolinia 505 605 601 · sklep@euro-matic.pl

(903146 Kit ASO) 620W

Image Reference	Item Description	Part Number	Item Quantity
	280MM COMBINATION TOOL HEAD PLASTIC BASE (PRO-FLO PF280)	912358	1
	FLO MAX CONICAL HOSE 38MM-32MM (BOFLEX) (2.2M)	915909	1
	Handy Kit	909564	1
	32mm Stainless Steel Tube Set	909563	1

EURO-MATIC.PL - Autoryzowany Sklep Numatic

Części zamienne do Numatic PPR370: euro-matic.pl › infolinia 505 605 601 · sklep@euro-matic.pl

Numatic International Limited. Chard, Somerset TA20 2GB
ENGLAND Tel: 01460 68600 www.numatic.co.uk

Numatic International GmbH. Fränkische Straße 15–19. D-30455 Hannover,
DEUTSCHLAND Tel: 05 11 98 42 16 0 www.numatic.de

Numatic International SAS. 13 / 17 rue du Valengelier. EAE La Tuilerie – 77500
CHELLES, FRANCE Tel: 01 64 72 61 61 www.numatic.fr

Numatic International BV. Vennootsweg 15, 2404 CG, Alphen aan den Rijn,
NEDERLAND Tel: 0172 467 999 www.numatic.nl

Numatic International (Pty.) Ltd. 16th & Pharmaceutical Roads, Midrand, Gauteng,
SOUTH AFRICA 1685 Tel: 0861 686 284 www.numatic.co.za

Numatic International Schweiz AG. Sihlbruggstrasse 3A, 6340 Baar.
SCHWEIZ Tel: 0041 (0) 41 76 80 76 - 0 www.numatic.ch

Numatic International ULDA. Rua da Boa Viagem, 177. 4470.210 Maia.
PORTUGAL Tel: +351 220 047 700 www.numatic.pt

Numatic International SLU. C/ La Forja, 41, 08840 Viladecans. (Barcelona),
SPAIN Tel: +34 93 647 22 22 www.numatic.es

Numatic International DENMARK. Fränkische Straße 15–19. D-30455 Hannover,
DEUTSCHLAND Tel: 05 11 98 42 16 0 www.numatic-online.dk

EURO-MATIC.PL - Autoryzowany Sklep Numatic

©Numatic International Limited 2021. Specification subject to change without prior notice. numatic.com

EXP-000926 02/23 (A03)

Części zamienne do Numatic PPR370: euro-matic.pl › infolinia 505 605 601 · sklep@euro-matic.pl