RSB150H (HEPA) Exploded Spares

NX300 PRO CORDLESS NETWORK

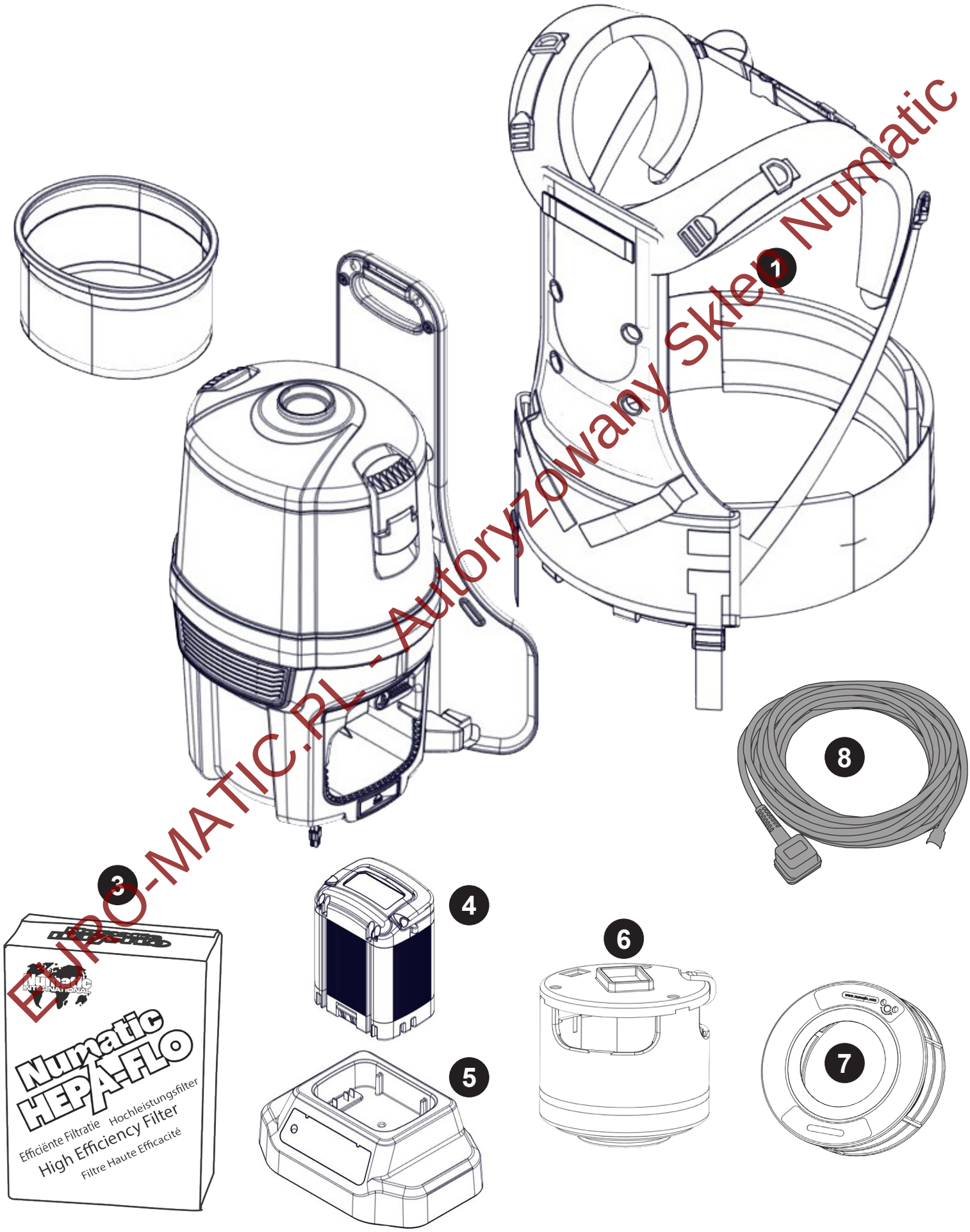

EURO-MATIC.PL - Autoryzowany Sklep Numatic

Części zamienne do Numatic RSB150NX – sprawdź w euro-matic.pl ›

Autoryzowany sklep euro-matic.pl · infolinia 505 605 601 · sklep@euro-matic.pl

Num	Description	Num
1	RUCKSACK HARNESS - RSB150/RSV150 (RED)	**912533**
2	SHORT BACKPACK TRITEX FILTER	**910915**
3	NVM-1AH INDIVIDUAL HEPAFLO FILTER BAG (RSV130)	**604011**
4	NX 300.LITHIUM ION BATTERY (300W/HR) PACKED.UN3480	**913686**
5	NX.300 LITHIUM BATTERY CHARGER [5]	**911834**
6	SIP CINDERSON 74MM 36V MOTOR (350W/200W)	**911895**
7	H13 FILTER ASSEMBLY (HZ)	**901647**
8	MAINS CABLE.BLACK.1800.0m75.3 .UK PLUG.	**912365**
	MAINS CABLE.BLACK.1800.0m75.3.EUROPEAN PLUG.	**912361**
	MAINS CABLE.BLACK.1800.1.3. AUSTRALIAN PLUG.	**912360**
	MAINS CABLE.BLACK.1800.1.3. SWISS PLUG.	**912364**
	MAINS CABLE.BLACK.1800.18AWG.3. NORTH AMERICAN PLUG.	**912362**
	MAINS CABLE.BLACK.1800.1.3. SOUTH AFRICAN PLUG.	**912363**

EURO-MATIC.PL - Autoryzowany Sklep Numatic

Części zamienne do Numatic RSB150NX: euro-matic.pl › infolinia 505 605 601 · sklep@euro-matic.pl

(607817 Kit AAT30E)

Image Reference	Item Description	Part Number	Item Quantity
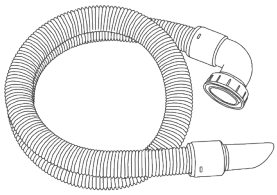	1.2M BOFLEX RSB/RSV150 HOSE ASSEMBLY	914980	1
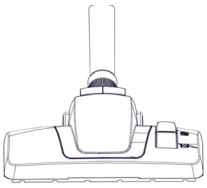	270MM COMBINATION TOOL HEAD PLASTIC BASE (PRO-FLO PF270)	902923	1
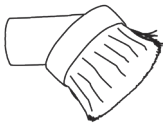	65MM SOFT DUSTING BRUSH (NVA-44B)	601144	1
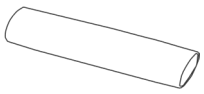	32MM DOUBLE TAPER ADAPTOR	601141	1
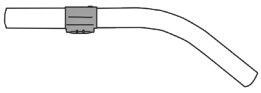	32MM ALUMINIUM WAND BEND PAINTED BLACK WITH BLACK NPC VOLUME CONTROL	915195	1
	TELESCOPIC WAND 32 X 560 X 940 ALUMINIUM	914759	1

EURO-MATIC.PL - Autoryzowany Sklep Numatic

Części zamienne do Numatic RSB150NX: euro-matic.pl › infolinia 505 605 601 · sklep@euro-matic.pl

Numatic International Limited. Chard, Somerset TA20 2GB
ENGLAND Tel: 01460 68600 www.numatic.co.uk

Numatic International GmbH. Fränkische Straße 15–19. D-30455 Hannover,
DEUTSCHLAND Tel: 05 11 98 42 16 0 www.numatic.de

Numatic International SAS. 13 / 17 rue du Valengelier. EAE La Tuilerie – 77500
CHELLES, FRANCE Tel: 01 64 72 61 61 www.numatic.fr

Numatic International BV. Vennootsweg 15, 2404 CG, Alphen aan den Rijn,
NEDERLAND Tel: 0172 467 999 www.numatic.nl

Numatic International (Pty.) Ltd. 16th & Pharmaceutical Roads, Midrand, Gauteng,
SOUTH AFRICA 1685 Tel: 0861 686 284 www.numatic.co.za

Numatic International Schweiz AG. Sihlbruggstrasse 3A, 6340 Baar.
SCHWEIZ Tel: 0041 (0) 41 76 80 76 - 0 www.numatic.ch

Numatic International ULDA. Rua da Boa Viagem, 177. 4470.210 Maia.
PORTUGAL Tel: +351 220 047 700 www.numatic.pt

Numatic International SLU. C/ La Forja, 41, 08840 Viladecans. (Barcelona),
SPAIN Tel: +34 93 647 22 22 www.numatic.es

Numatic International DENMARK. Fränkische Straße 15–19. D-30455 Hannover,
DEUTSCHLAND Tel: 05 11 98 42 16 0 www.numatic-online.dk

EURO-MATIC.PL - Autoryzowany Sklep Numatic

©Numatic International Limited 2021. Specification subject to change without prior notice. numatic.com

EXP-000932 02/23 (A04)

Części zamienne do Numatic RSB150NX: euro-matic.pl › infolinia 505 605 601 · sklep@euro-matic.pl